Instruction Manual

COMMERCIAL ELECTRIC WATER HEATER

Tennessee Waltz Parkway
Ashland City, TN 37015

Low Lead Content

AHRI CERTIFIED®
www.ahridirectory.org

UL LISTED

CLASSIFIED UL WATER QUALITY

ASME HLW (OPTIONAL)

52/80/120 SERIES 100
INSTALLATION - OPERATION - SERVICE
MAINTENANCE - LIMITED WARRANTY

Thank you for buying this energy efficient water heater. We appreciate your confidence in our products.

⚠ WARNING

Read and understand this instruction manual and safety messages before installing, operating, or servicing this water heater.

Failure to follow these instructions and safety messages could result in death or serious injury.

This manual must remain with water heater.

⚠ WARNING

If the heater becomes immersed in water up to or above the level of the bottom of the element doors, the heater should be examined by a qualified service agency before it is placed in operation, see Page 2.

PLACE THESE INSTRUCTIONS ADJACENT TO HEATER AND NOTIFY OWNER TO KEEP FOR FUTURE REFERENCE.

PRINTED 0917

100293647 2000548787 (Rev. A)

SAFE INSTALLATION, USE, AND SERVICE

The proper installation, use and servicing of this water heater is extremely important to your safety and the safety of others.

Many safety-related messages and instructions have been provided in this manual and on your own water heater to warn you and others of a potential injury hazard. Read and obey all safety messages and instructions throughout this manual. It is very important that the meaning of each safety message is understood by you and others who install, use, or service this water heater.

⚠	**This is the safety alert symbol. It is used to alert you to potential personal injury hazards. Obey all safety messages that follow this symbol to avoid possible injury or death.**
⚠ **DANGER**	**DANGER indicates an imminently hazardous situation which, if not avoided, will result in death or injury.**
⚠ **WARNING**	**WARNING indicates a potentially hazardous situation which, if not avoided, could result in death or injury.**
⚠ **CAUTION**	**CAUTION indicates a potentially hazardous situation which, if not avoided, could result in minor or moderate injury.**
CAUTION	**CAUTION indicates a potentially hazardous situation which, if not avoided, could result in minor or moderate injury.**

All safety messages will generally tell you about the type of hazard, what can happen if you do not follow the safety message, and how to avoid the risk of injury.

IMPORTANT DEFINITIONS

- **Qualified Installer or Service Agency:**

  Installation and service of this water heater requires ability equivalent to that of a Qualified Agency (as defined by ANSI below) in the field involved. Installation skills such as plumbing, electrical supply are required in addition to electrical testing skills when performing service.

- **ANSI Z223.1 2006 Sec. 3.3.83:**

  "Qualified Agency" - "Any individual, firm, corporation or company that either in person or through a representative is engaged in and is responsible for (a) the installation, testing or replacement of gas piping or (b) the connection, installation, testing, repair or servicing of appliances and equipment; that is experienced in such work; that is familiar with all precautions required; and that has complied with all the requirements of the authority having jurisdiction."

GENERAL SAFETY INFORMATION

PRECAUTIONS

DO NOT USE THIS WATER HEATER IF ANY PART HAS BEEN EXPOSED TO FLOODING OR WATER DAMAGE. Immediately call a qualified service technician to inspect the water heater and to replace any part of the control system which has been under water.

If the unit is exposed to the following, do not operate heater until all corrective steps have been made by a qualified service technician.

1. External fire.
2. Damage.
3. Firing without water.

GROUNDING INSTRUCTIONS

This water heater must be grounded in accordance with the National Electrical Code and/or local codes. These must be followed in all cases. Failure to ground this water heater properly may also cause erratic control system operation on ELECTRONIC CONTROL models.

This water heater must be connected to a grounded metal, permanent wiring system; or an equipment grounding conductor must be run with the circuit conductors and connected to the equipment grounding terminal or lead on the water heater.

HYDROGEN GAS (FLAMMABLE)

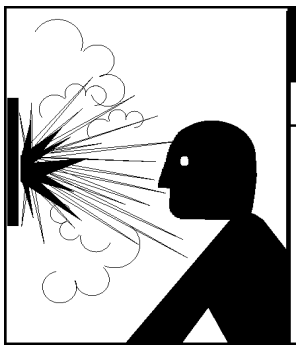

⚠ WARNING

Explosion Hazard

- Flammable hydrogen gases may be present.
- Keep all ignition sources away from faucet when turning on hot water.

Hydrogen gas can be produced in a hot water system served by this heater that has not been used for a long period of time (generally two weeks or more). Hydrogen gas is extremely flammable. To reduce the risk of injury under these conditions, it is recommended that the hot water faucet be opened for several minutes at the kitchen sink before using any electrical appliance connected to the hot water system. If hydrogen is present there will probably be an unusual sound such as air escaping through the pipe as the water begins to flow. THERE SHOULD BE NO SMOKING OR OPEN FLAME NEAR THE FAUCET AT THE TIME IT IS OPEN.

When servicing this unit, verify the power to the unit is turned off prior to opening the control cabinet door.

⚠ WARNING

Read and understand this instruction manual and the safety messages herein before installing, operating, or servicing this water heater.

Failure to follow these instructions and safety messages could result in death or serious injury.

This manual must remain with the water heater.

CAUTION

Improper installation, use and service may result in property damage.

- Do not operate water heater if any part has been exposed to flooding or water damage.
- Inspect anode rods regularly, replace when significantly depleted.
- Install in location with drainage.
- Fill tank with water before operation.
- Properly sized thermal expansion tanks are required on all closed water systems.

Refer to this manual for installation and service.

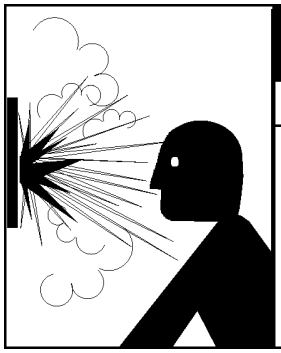

⚠ WARNING

Explosion Hazard

- Flammable hydrogen gases may be present.
- Keep all ignition sources away from faucet when turning on hot water.

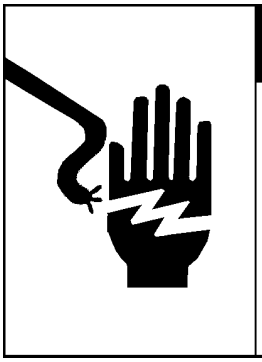

⚠ WARNING

- **Before removing any access panels or servicing the water heater, make sure the electrical supply to the water heater is turned "OFF."**
- **Failure to do this could result in death, serious bodily injury, or property damage.**

⚠ DANGER

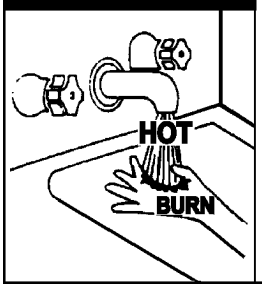

Water temperature over 125°F (52°C) can cause severe burns resulting in severe injury or death.

Children, the elderly, and the physically or mentally disabled are at highest risk for scald injury.

Feel water before bathing or showering.

Temperature limiting valves are available.

Read instruction manual for safe temperature setting.

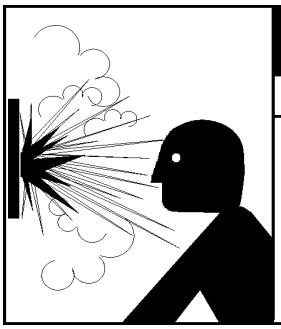

⚠ WARNING

Explosion Hazard

- Overheated water can cause water tank explosion.
- Properly sized temperature and pressure relief valve must be installed in opening provided.

TABLE OF CONTENTS

SAFE INSTALLATION, USE, AND SERVICE.....2
GENERAL SAFETY INFORMATION.....3
Precautions 3
Hydrogen Gas (Flammable).....3
INTRODUCTION.....5
Preparing for the Installation 5
DIMENSIONS AND CAPACITIES 6
APPROVALS 7
MODEL AND RATING 7
FEATURES AND COMPONENTS 8
LOCATING THE NEW WATER HEATER.....10
Facts to Consider About the Location 10
INSTALLATION 11
Required Ability 11
General 11
Contaminated Water 11
Circulating Pump.....11
Insulation Blankets.....11
Temperature-Pressure Relief Valve 11
Water Line Connections.....12
Closed Water Systems.....12
Thermal Expansion 12
ELECTRICAL 13
GENERAL.....13
AMPERAGE TABLE/OVER-CURRENT PROTECTION14
HEATER CIRCUITS - ELECTRONIC CONTROL MODELS 14
CONTROL CIRCUIT - ELECTRONIC CONTROL MODELS 14
WIRING DIAGRAMS.....15
POWER CIRCUIT DIAGRAMS - ELECTRONIC CONTROL MODELS 16
POWER CIRCUIT DIAGRAMS - SURFACE MOUNT CONTROL MODELS.....18
OPERATION.....20
GENERAL.....20
FILLING THE WATER HEATER.....20
INITIAL START UP.....20
Draining the Water Heater.....20
TEMPERATURE REGULATION 21
HIGH TEMPERATURE LIMIT CONTROLS (ECO).....21
THERMOSTAT CONTROLS 21
THERMOSTAT SETTINGS - SURFACE MOUNT CONTROL 21
ELECTRONIC CONTROL MODELS OPERATION.....22
Control System Features 22
Control System Navigation.....22
The Desktop Screen 22
TEMPERATURES MENU 24
Temperature Settings.....25
HEATER STATUS MENU.....26
ECONOMY MODE SETUP MENU 26
Economy Mode Settings 27
ALARM OUTPUT SETUP MENU.....30
DISPLAY SETTINGS MENU.....30
HEATER INFORMATION MENU 30
CURRENT FAULT / ALERT MENU 31
FAULT HISTORY MENU 31
FAULT OCCURRENCE MENU 31
RESTORE FACTORY DEFAULTS MENU 32
MAINTENANCE 32
General 32
Anode Rod Inspection.....33
FLUSHING the Water Heater.....33
SEDIMENT REMOVAL 33
LIME SCALE REMOVAL.....33
TROUBLESHOOTING CHECKLIST 35
CHECKLIST 35
Leakage Checkpoints.....36
PIPING DIAGRAMS 37
PIPING DIAGRAMS 41
PIPING DIAGRAMS 47
MANIFOLD KITS.....49
NOTES 50
NOTES 51

INTRODUCTION

Thank You for purchasing this water heater. Properly installed and maintained, it should give you years of trouble free service.

Abbreviations Found In This Instruction Manual:

- AHRI - Air Condition, Heating and Refrigeration Institute
- ANSI - American National Standards Institute
- ASME - American Society of Mechanical Engineers
- NEC - National Electrical Code
- NFPA - National Fire Protection Association
- UL - Underwriters Laboratory

PREPARING FOR THE INSTALLATION

⚠ WARNING

- **Before removing any access panels or servicing the water heater, make sure the electrical supply to the water heater is turned "OFF."**
- **Failure to do this could result in death, serious bodily injury, or property damage.**

1. Read the "General Safety Information" section of this manual first and then the entire manual carefully. If you don't follow the safety rules, the water heater may not operate safely. It could cause DEATH, SERIOUS BODILY INJURY AND/OR PROPERTY DAMAGE.

   This manual contains instructions for the installation, operation, and maintenance of the electric water heater. It also contains warnings throughout the manual that you must read and be aware of. All warnings and all instructions are essential to the proper operation of the water heater and your safety. READ THE ENTIRE MANUAL BEFORE ATTEMPTING TO INSTALL OR OPERATE THE WATER HEATER.

   Detailed installation diagrams are in this manual. These diagrams will serve to provide the installer with a reference for the materials and method of piping suggested. IT IS NECESSARY THAT ALL WATER PIPING AND THE ELECTRICAL WIRING BE INSTALLED AND CONNECTED AS SHOWN IN THE DIAGRAMS.

   Particular attention should be given to the installation of thermometers at the locations indicated in the diagrams as these are necessary for checking the operation of the heater.

   Be sure to turn off power when working on or near the electrical system of the heater. Never touch electrical components with wet hands or when standing in water. When replacing fuses always use the correct size for the circuit. see page 13.

   The principal components of the heater are identified on pages 7 & 8. The model and rating plate on page 6 interprets certain markings into useful information. Both of these references should be used to identify the heater, its components and optional equipment.

2. The installation must conform with these instructions and the local code authority having jurisdiction and the requirements of the power company. In the absence of local codes, the installation must comply with the current editions of the National Electrical Code, NFPA 70 or the Canadian Electrical Code CSA C22.1. The National Electrical Code may be ordered from: National Fire Protection Association, 1 Batterymarch Park, Quincy, MA 02269. The Canadian Electrical Code is available from the Canadian Standards Association, 8501 East Pleasant Valley Road, Cleveland, OH 44131.

3. If after reading this manual you have any questions or do not understand any portion of the instructions, call the toll free number listed on the back cover of this manual for technical assistance.

   A sample rating plate is shown on page 6 of this manual. In order to expedite your request, please have full model and serial number available for the technician.

4. Carefully plan your intended placement of the water heater. Examine the location to ensure the water heater complies with the "Locating the New Water Heater" section in this manual.

   Installation and service of this water heater requires ability equivalent to that of a licensed tradesman or qualified agency (page 2) in the field involved. Plumbing and electrical work are required.

5. For installation in California this water heater must be braced or anchored to avoid falling or moving during an earthquake. See for instructions for correct installation procedures. Instructions may be obtained from California Office of the State Architect, 1102 Q Street, Suite 5100, Sacramento, CA 95811.

6. Massachusetts Code requires this water heater to be installed in accordance with Massachusetts 248-CMR 2.00: State Plumbing Code and 248-CMR 5.00.

DIMENSIONS AND CAPACITIES

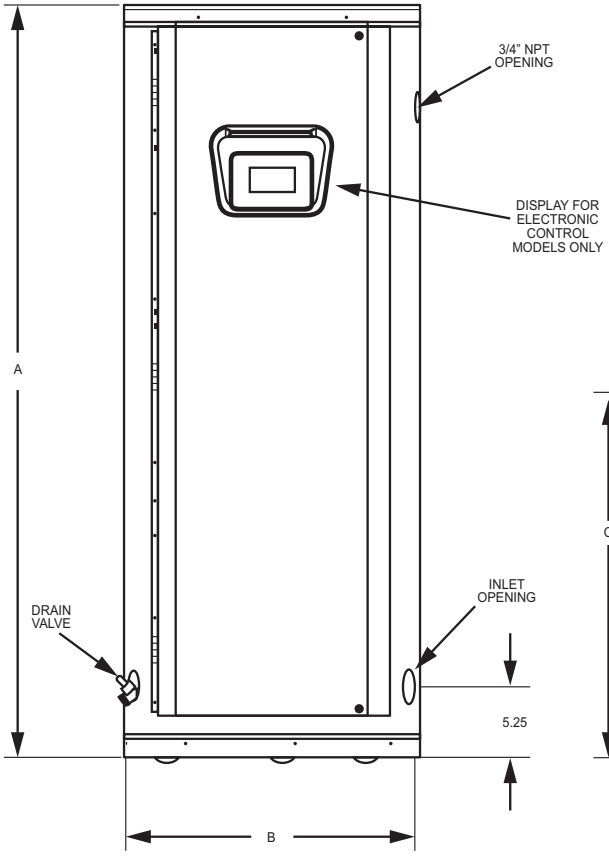

This Instruction Manual covers two models of commercial electric water heaters:

These two models are equipped from the factory with different controls.

In this Instruction Manual ,one model is factory equipped with a surface mounted thermostat/ECO combination control and is referred to as the “Surface Mount Control” model.

The other model is equipped with an electronic control system and is referred to as the “Electronic Control” model.

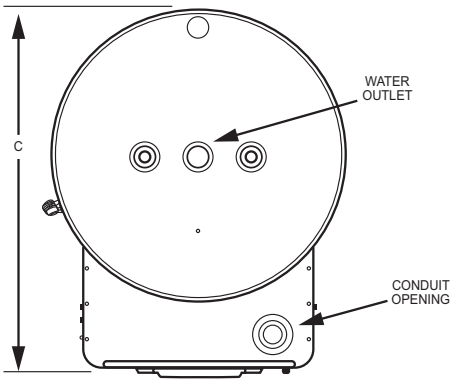

Figure 1. Components and Physical Dimensions

Table 1. Tank Capacities and Dimensions					
Model Number	**Tank Capacity in Gallons (Liters)**	**A - Inches (mm)**	**B - Inches (mm)**	**C - Inches (mm)**	**Inlet/Outlet**
52	50 (189.3)	55 3/4 (1416)	21 3/4 (552)	27 (685)	1 1/4
80	80 (302.8)	60 1/4 (1350)	25 1/2 (648)	31 (787)	1 1/4
120	119 (450.5)	62 1/4 (1581)	29 1/2 (749)	35 (889)	1 1/4

Table 2. Recovery Rate in Gallons Per Hour Temperature Rise °F													
Standard KW Input	**BTU/ Hour**	**30°**	**40°**	**50°**	**60°**	**70°**	**80°**	**90°**	**100°**	**110°**	**120°**	**130°**	**140°**
6	20,478	82	62	49	41	35	31	27	25	22	21	19	18
9	30,717	123	92	74	62	53	46	41	37	34	31	28	26
12	40,956	164	123	98	82	70	61	55	49	45	41	38	35
13.5	46,075	184	138	111	92	79	69	62	55	50	46	43	40
15	51,195	205	154	123	102	88	77	68	61	56	51	47	44
18	61,434	246	184	148	123	105	92	82	74	67	61	57	53
24	81,912	328	246	197	164	140	123	109	98	89	82	76	70
27	92,151	369	276	221	184	158	138	123	111	101	92	85	79
30	102,390	410	307	246	205	176	154	137	123	112	102	95	88
36	122,868	492	369	295	246	211	184	164	148	134	123	113	105
40.5	138,226	554	418	3332	277	237	208	1185	166	151	138	128	119
45	153,585	615	461	369	307	263	230	205	184	168	154	142	132
54	184,302	738	553	443	369	316	277	246	221	201	184	170	158

*Figured at 1 KW (3413 Btu) = 4.1 gallons at 100°F temperature rise.
To determine recovery rate per minute, divide recovery rate per hour by 60.

APPROVALS

Low Lead Content

CLASSIFIED
WATER QUALITY

All models meet National Sanitation Foundation NSF-5 requirements.

All models are listed by Underwriters Laboratories Inc.

AHRI CERTIFIED®
www.ahridirectory.org

MODEL AND RATING

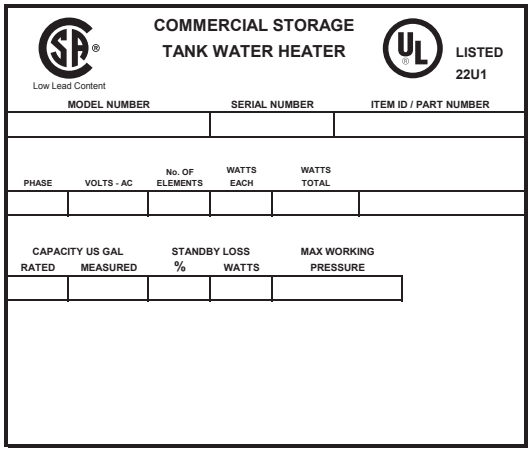

Figure 2. Example Rating Plate

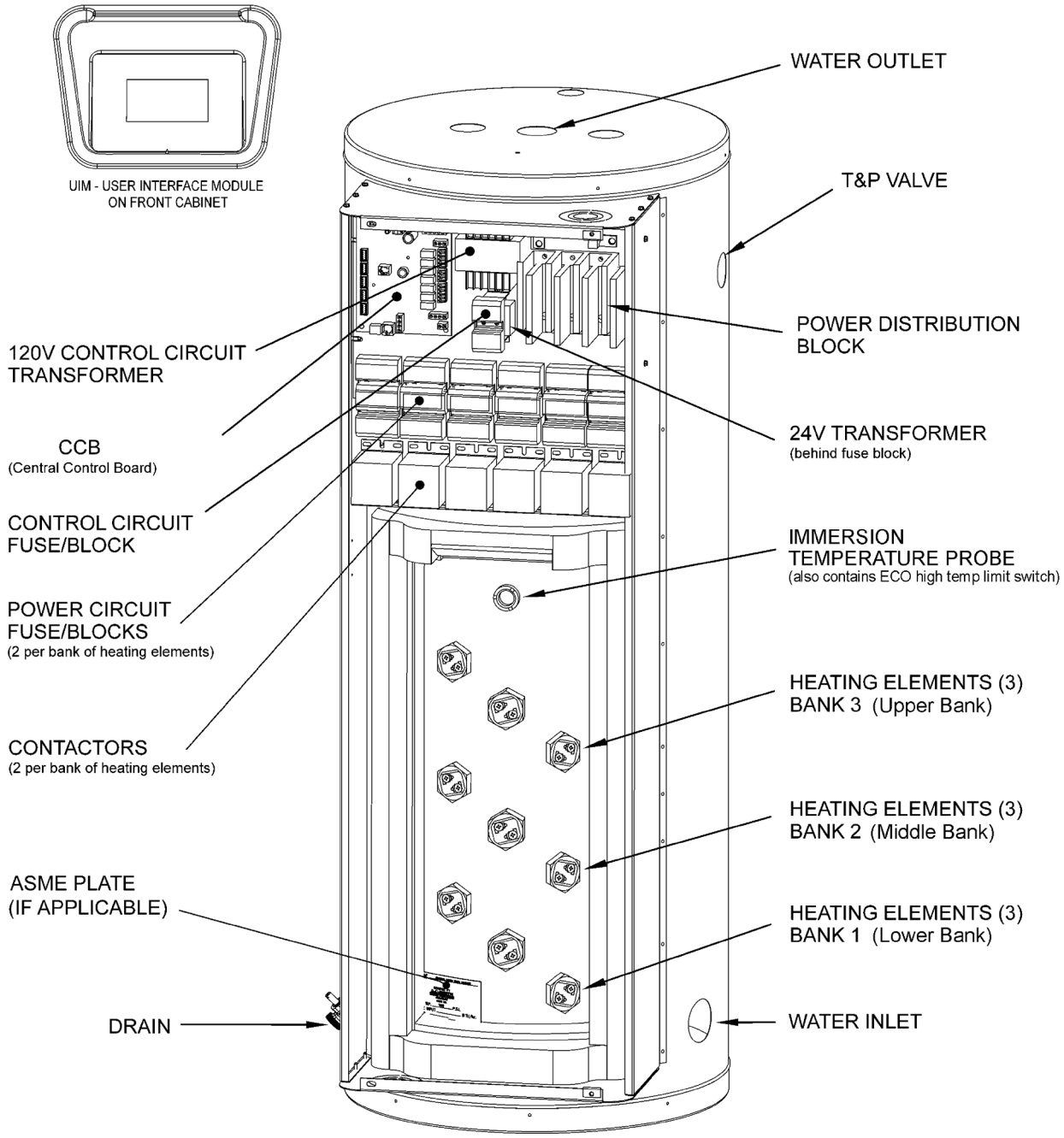

Figure 3. Electronic Control Models

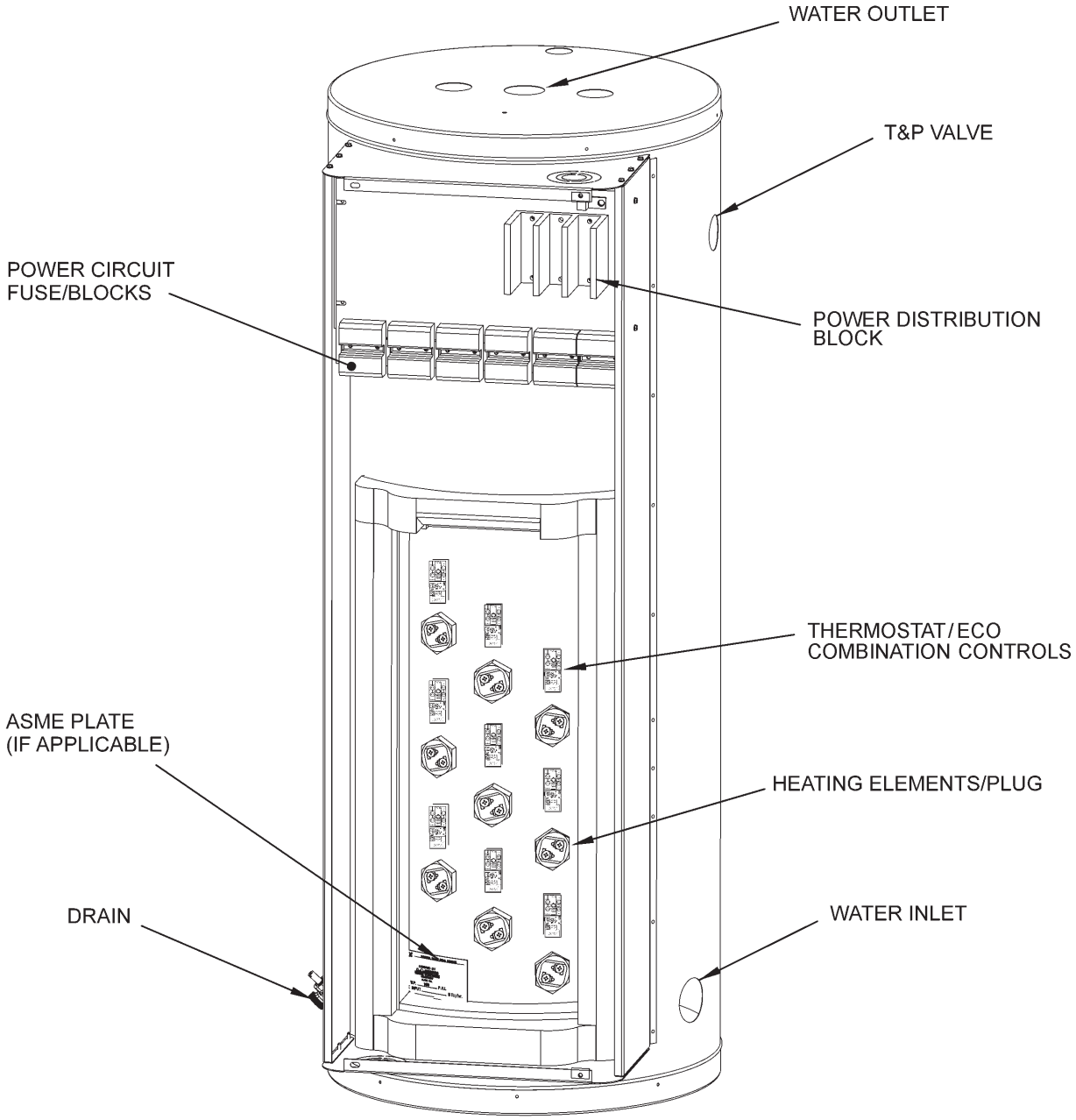

Figure 4. Surface Mount Control Models

LOCATING THE NEW WATER HEATER

FACTS TO CONSIDER ABOUT THE LOCATION

CAUTION

Property Damage Hazard

- All water heaters eventually leak.
- Do not install without adequate drainage.

Carefully choose a location for the new water heater. The placement is a very important consideration for the safety of the occupants in the building and for the most economical use of the water heater.

Whether replacing an old water heater or putting the water heater in a new location, the following critical points must be observed. The water heater must be located:

- On a level surface. Shim the channel type skid base as necessary if levelling is required.
- Near a floor drain. The heater should be located in an area where leakage of the tank or connections will not result in damage to the area adjacent to the heater or to lower floors of the structure.
- Close to the point of major hot water usage and the power supply.
- Hot water piping and branch circuit wiring should be as short as possible.
- Insulate hot and cold water piping where heat loss and condensation may be a problem.
- Heater construction permits installation, maintenance, and service work to be performed through the front control panel.
- Suggested clearances from adjacent surfaces are 12 inches on top, 30 inches in front for access to the unit.
- The heater may be installed on or against combustible surfaces. The left side and back may be placed flush against adjacent surfaces.
- The temperature of the space in which the water heater is installed must not go below 32°F or above 122°F.

INSTALLATION

REQUIRED ABILITY

Installation and service of this water heater requires ability equivalent to that of a qualified agency (page 2) in the field involved. Plumbing and electrical work is required.

GENERAL

The installation must conform with these instructions and the local code authority having jurisdiction and the requirements of the power company. In the absence of local codes, the installation must comply with the current editions of the National Electrical Code, NFPA 70 or the Canadian Electrical Code CSA C22.1. The National Electrical Code may be ordered from: National Fire Protection Association, 1 Batterymarch Park, Quincy, MA 02269. The Canadian Electrical Code is available from the Canadian Standards Association, 8501 East Pleasant Valley Road, Cleveland, OH 44131.

Note: To comply with NSF Standard 5 installation requirements the bottom of the water heater must be sealed to the floor with a silicone based sealant or elevated 6 inches above the floor.

Do **NOT** test electrical system before heater is filled with water, follow the START UP procedure in the OPERATION section of this manual.

The principal components of the heater are identified in the Features and Components illustrations on pages 6 and 7.

⚠ DANGER

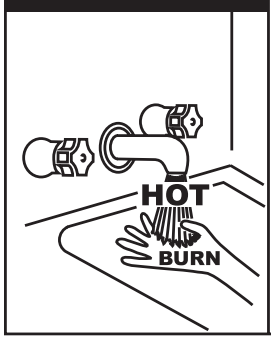

Water temperature over 125°F (52°C) can cause severe burns instantly resulting in severe injury or death.

Children, the elderly and the physically or mentally disabled are at highest risk for scald injury.

Feel water before bathing or showering.

Temperature limiting devices such as mixing valves must be installed when required by codes and to ensure safe temperatures at fixtures.

MIXING VALVE USAGE:

Water heaters are intended to produce hot water. Water heated to a temperature which will satisfy space heating, clothes washing, dish washing, cleaning and other sanitizing needs can scald and permanently injure you upon contact. Some people are more likely to be permanently injured by hot water than others. These include the elderly, children, the infirm, or physically/ developmentally disabled. If anyone using hot water in your home fits into one of these groups or if there is a local code or state law requiring a maximum water temperature at the hot water tap, then you must take special precautions. In addition to using the lowest possible temperature setting that satisfies your hot water needs, a means such as a MIXING VALVE, should be used at the hot water taps used by these people or at the water heater.

MIXING VALVES for reducing point of use temperature are available. Consult a qualified installer or service agency. Follow all manufacturer's Instructions for installation of these valves. Before changing the factory setting on the thermostat, read the "Temperature Regulation" section in this manual.

⚠ WARNING

Toxic Chemical Hazard

- Do not connect to non-potable water system.

CONTAMINATED WATER

This water heater shall not be connected to any heating system(s) or component(s) used with a non-potable water heating appliance.

Toxic chemicals, such as those used for boiler treatment shall not be introduced into this system.

CIRCULATING PUMP

Field installed circulating pumps should be of all bronze construction.

INSULATION BLANKETS

Insulation blankets are available to the general public for external use on electric water heaters but are not necessary with this product. The purpose of an insulation blanket is to reduce the standby heat loss encountered with storage tank heaters. Your water heater meets or exceeds the EPACT and ASHRAE/IES 90.1 standards with respect to insulation and standby loss requirements, making an insulation blanket unnecessary.

Should you choose to apply an insulation blanket to this heater, you should follow these instructions below. Failure to follow these instructions can result in fire, serious personal injury, or death.

- Do not cover the temperature and pressure relief (T & P) valve with an insulation blanket.
- Do not cover the instruction manual. Keep it on the side of the water heater or nearby for future reference.
- Do obtain new warning and instruction labels for placement on the blanket directly over the existing labels.

TEMPERATURE-PRESSURE RELIEF VALVE

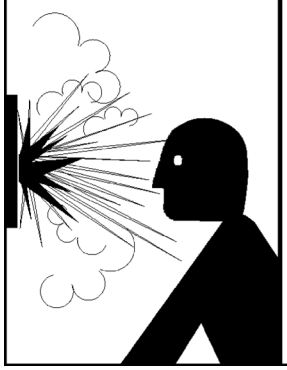

⚠ WARNING

Explosion Hazard

- Temperature-pressure relief valve must comply with ANSI Z21.22 and ASME code.
- Properly sized temperature-relief valve must be installed in opening provided.
- Failure to install relief valve can result in overheating and excessive tank pressure.
- Failure to follow these instructions can cause serious injury or death.

This water heater is provided with a properly rated/sized and certified combination temperature - pressure relief valve by the manufacturer. The valve is certified by a nationally recognized testing laboratory that maintains periodic inspection of production of listed equipment of materials as meeting the requirements for Relief Valves for Hot Water Supply Systems, ANSI Z21.22 • CSA 4.4, and the code requirements of ASME.

If replaced, the new valve must meet the requirements of local codes, but not less than a combination temperature and pressure relief valve rated/sized and certified as indicated in the above paragraph. The new valve must be marked with a maximum set pressure not to exceed the marked hydrostatic working pressure of the water heater (150 psi = 1,035 kPa) and a discharge capacity not less than the water heater Btu/hr or KW input rate as shown on the water heater's model rating plate.

For safe operation of the water heater, the temperature and pressure relief valve must not be removed from its designated opening nor plugged. The temperature-pressure relief valve must be installed directly into the fitting of the water heater designed for the relief valve. Install discharge piping so that any discharge will exit only within 6 inches (15.2 cm) above, or external to the structure. Do not pipe the discharge to a crawl space. Be certain that no contact is made with any live electrical part. The discharge opening must not be blocked or reduced in size under any circumstances. Excessive length, over 30 feet (9.14 m), or use of more than four elbows can cause restriction and reduce the discharge capacity of the valve.

No valve or other obstruction is to be placed between the relief valve and the tank. Do not connect discharge piping directly to the drain unless a 6" (15.2 cm) air gap is provided. To prevent bodily injury, hazard to life, or property damage, the relief valve must be allowed to discharge water in adequate quantities should circumstances demand. If the discharge pipe is not connected to a drain or other suitable means, the water flow may cause property damage.

CAUTION

Water Damage Hazard

- Temperature-pressure relief valve discharge pipe must terminate at adequate drain.

The Discharge Pipe:

- Shall not be smaller in size than the outlet pipe size of the valve, or have any reducing couplings or other restrictions.
- Shall not be plugged or blocked.
- Shall not be exposed to freezing temperatures.
- Shall be of material listed for hot water distribution.
- Shall be installed so as to allow complete drainage of both the Temperature-Pressure Relief Valve and the discharge pipe.
- Must terminate a maximum of six inches above a floor drain or external to the building. In cold climates, it is recommended that the discharge pipe be terminated at an adequate drain inside the building.
- Shall not have any valve or other obstruction between the relief valve and the drain.

⚠ DANGER

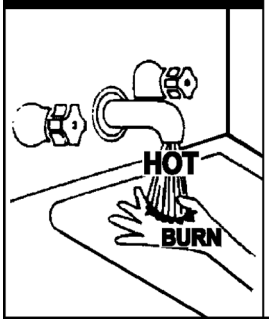

Water temperature over 125°F (52°C) can cause severe burns resulting in severe injury or death.

Children, the elderly, and the physically or mentally disabled are at highest risk for scald injury.

Feel water before bathing or showering.

Temperature limiting valves are available.

Read instruction manual for safe temperature setting.

The temperature-pressure relief valve must be manually operated at least once a year. Caution should be taken to ensure that (1) no one is in front of or around the outlet of the temperature-pressure relief valve discharge line, and (2) the water manually discharged will not cause any bodily injury or property damage because the water may be extremely hot. If after manually operating the valve, it fails to completely reset and continues to release water, immediately close the cold water inlet to the water heater, follow the draining instructions in this manual, and replace the temperature-pressure relief valve with a properly rated/sized new one.

If you do not understand these instructions or have any questions regarding the temperature-pressure relief valve call the toll free number listed on the back cover of this manual for technical assistance.

WATER LINE CONNECTIONS

This manual provides detailed piping installation diagrams (see back section of this manual) for typical methods of application. For the heater inlet and outlet connections, dielectric unions are recommended. The water heater may be installed by itself, or with a separate storage tank, on both single and two-temperature systems. When used with a separate storage tank, the circulation may be either by gravity or by means of a circulating pump. When a circulating pump is used it is important to note that the flow rate should be slow so that there will be a minimum of turbulence inside the heater.

CLOSED WATER SYSTEMS

Water supply systems may, because of code requirements or such conditions as high line pressure, among others, have installed devices such as pressure reducing valves, check valves, and back flow preventers. Devices such as these cause the water system to be a closed system.

THERMAL EXPANSION

As water is heated, it expands (thermal expansion). In a closed system the volume of water will grow when it is heated. As the volume of water grows there will be a corresponding increase in water pressure due to thermal expansion. Thermal expansion can cause premature tank failure (leakage). This type of failure is not covered under the limited warranty. Thermal expansion can also cause intermittent temperature-pressure relief valve operation: water discharged from the valve due to excessive pressure build up. This condition is not covered under the limited warranty. The temperature-pressure relief valve is not intended for the constant relief of thermal expansion.

A properly sized thermal expansion tank must be installed on all closed systems to control the harmful effects of thermal expansion. Contact a local plumbing service agency to have a thermal expansion tank installed.

ELECTRICAL

GENERAL

The installation must conform with these instructions and the local code authority having jurisdiction and the requirements of the power company. In the absence of local codes, the installation must comply with the current editions of the National Electrical Code, NFPA 70 or the Canadian Electrical Code CSA C22.1.

⚠ WARNING

- **Before removing any access panels or servicing the water heater, make sure the electrical supply to the water heater is turned "OFF."**
- **Failure to do this could result in death, serious bodily injury, or property damage.**

An electrical ground is required to reduce risk of electrical shock or possible electrocution. The water heater should be connected to a separate grounded branch circuit with over-current protection and disconnect switch. The water heater should be grounded in accordance with national and local codes.

Voltage applied to the heater should not vary more than +5% to -10% of the model and rating plate marking for satisfactory operation.

Table 3. Allowable Ampacities of Insulated Conductors[1]

Size	Temperature Rating of Conductor								Size
	60 °C (140 °F)	75 °C (167 °F)	85 °C (185 °F)	90 °C (194 °F)	60 °C (140 °F)	75 °C (167 °F)	85 °C (185 °F)	90 °C (194 °F)	
AWG MCM	Types RUW, TTW, and UF	Types FEPW, RH, RHW, RUH, THW, THWN, XHHW, USE, and ZW	Types V, and MI	Types TA, TBS, SA, AVB, SIS, FEP[2], FEPB[2], RHH[2], THHN[2], and XHHW[2, 3]	Types RUW, TTW, and UF	Types RH, RHW, RUH, THW, THWN, XHHW, and USE	Types V, and MI	Types TA, TBS, SA, AVB, SIS, RHH[2], THHN[2], and XHHW[2, 3]	AWG MCM
Copper					Aluminum or Copper-Clad Aluminum				
18	....	....	....	21	....	....	....	....	....
16	....	....	22	22	....	....	....	....	....
14	15	15	25	25	....	....	....	....	....
12	20	20	30	30	15	15	25	25	12
10	30	30	40	40	25	25	30	30	10
8	40	45	50	50	30	40	40	40	8
6	55	65	70	70	40	50	55	55	6
4	70	85	90	90	55	65	70	70	4
3	80	100	105	105	65	75	80	80	3
2		115	120	120	75	90	95	95	2
1		130	140	140		100	110	110	1
0		150	155	155		120	125	125	0
00		175	185	185		135	145	145	00
000		200	210	210		155	165	165	000
0000		230	235	285		180	185	185	0000
250		255	270	270		205	215	215	250
300		285	300	300		230	240	240	300
350		310	325	325		250	260	260	350
400		335	360	360		270	290	290	400
500		380	405	405		310	330	330	500
Correction Factors									
Ambient Temp °C	For ambient temperatures over 30 °C, multiply the ampacities shown above by the appropriate correction factor to determine the maximum allowable load current.								Ambient Temp °F

1. Not more than three conductors in raceway, cable, or earth (directly buried), based on ambient temperature of 30°C (86°F)
2. +The load current rating and the overcurrent protection for these conductors shall not exceed 15 amperes for 14 AWG. 20 amperes for 12 AWG and 30 amperes for 10 AWG copper; or 15 amperes for 12 AWG and 25 amperes for 10 AWG aluminum and copper-clad aluminum.
3. *For dry locations only. See 75°C column for wet locations.

Table 4. Required Electrical Characteristics											
			Full Load Current In Amperes								
			Single Phase				Three Phase				
KW Input	Number Of Elements	Element wattage	208V	240V	277V	480V	208V	240V	480V	Number Of Ther-mostats	Number Of Fuses
12	3	4000	58	50	44	25	34	29	15	3	6
13.5		4500	65	57	49	29	38	33	17		
15		5000	73	63	55	32	42	37	18		
18		6000	- - -	75	65	38	- - -	44	22		
18	6	3000	87	- - -	- - -	- - -	50	- - -	- - -	6	12
24		4000	116	100	87	50	67	58	29		
27		4500	130	113	98	57	75	65	33		
30		5000	145	125	109	63	84	73	37		
36		6000	- - -	150	130	75	- - -	87	44		
36	9	4000	173	- - -	- - -	- - -	100	- - -	- - -	9	18
40.5		4500	195	169	147	85	113	98	49		
45		5000	217	188	163	94	125	109	55		
54		6000	- - -	225	195	113	150	130	65		

AMPERAGE TABLE/OVER-CURRENT PROTECTION

The tables above provides the total connected heating element load in amperes for branch circuit conductor and over-current protection sizing. Single-phase heaters are two wire circuits. Three-phase heaters are three wire circuits. In addition to the foregoing, a grounded conductor is required.

The rating of the over-current protection must be computed on the basis of 125% of the total connected load amperage. Where the standard ratings and settings do not correspond with this computation, the next higher standard rating or setting should be selected.

HEATER CIRCUITS - ELECTRONIC CONTROL MODELS

The water heater's electrical components are pictured and identified in ***Figure 3*** and ***Figure 4*** The model and rating plate illustration on page 4 identifies heater circuit ratings. The ELECTRONIC CONTROL model has two electrical circuits:

- The control circuit, which controls the electrical power to heating elements, referring the following control circuit diagram ***Figure 8.***
- The power circuit, which is operated by the control circuit carries the electrical load of the heating elements. The following describes the heater circuits and includes wiring diagrams for Delta configuration, refer to the "WYE Configuration Insert" for water heaters operating at 380V/400V/416V/575V. All heater circuits are designed for 50/60 cycle alternating current.

CONTROL CIRCUIT - ELECTRONIC CONTROL MODELS

These models are equipped with an electronic control system. The system includes a CCB (Central Control Board), an immersion temperature probe with ECO for temperature sensing and limiting, a UIM (User Interface Module) for user interface & information display and element current sensors for monitoring the power circuits. Refer to the control circuit label on the water heater for details. The CCB is powered by a small 120V/24V transformer. The control circuit operates on 120V supplied by a larger 100VA transformer. Standard equipment includes control circuit fusing using two, 3 amp, class G fuses with 600 volt rating. Do not substitute fuses of a different rating.

Sequence of Operation

1. When the control is powered, the UIM should display model information, water temperature, Operating Set Point, heating status and operating mode.
2. If the control determines that the actual water temperature inside the tank is below the programmed Operating Setpoint minus the (1st) differential, a call for heat is activated.
3. After all safety checks are verified, the CCB will energize contactor coils starting with the lower bank of heating elements (each diagonal row of three heating elements is considered a "bank" - see ***Figure 3***) then energize the middle bank (if so equipped) and top bank (if so equipped). The middle and top banks (if so equipped) are energized according to programmed 2nd and 3rd differential set points.
4. The control remains in the heating mode until the water temperature reaches the programmed Operating Setpoint. At this point the contactors will be de-energized in the reverse order.
5. The control system now enters the standby operating mode while continuing to monitor the water temperature and the state of other system devices. If the water temperature drops below the programmed Operating Setpoint minus the (1st) differential, the control will automatically return to step 2 and repeat the heating cycle.

   NOTE: See the Electronic Control Models Operation section for more detailed information on temperature settings mentioned above.

120 VAC CONTROL CIRCUIT TRANSFORMER CONNECTIONS - ELECTRONIC CONTROL MODELS

NOTE: THIS TABLE TO BE USED FOR 8 TAP AND 5 TAP TRANSFORMERS

	VOLTS	LINE ON	LOAD ON	CONNECT
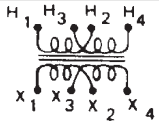	480	H_1 & H_4	X_1 & X_4	H_2 & H_3 X_1 & X_3 X_2 & X_4
	480/277			
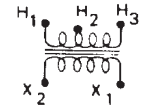	208	H_1 & H_2	X_1 & X_2	—
	240	H_1 & H_3	X_1 & X_2	—

Figure 5. Transformer Connections

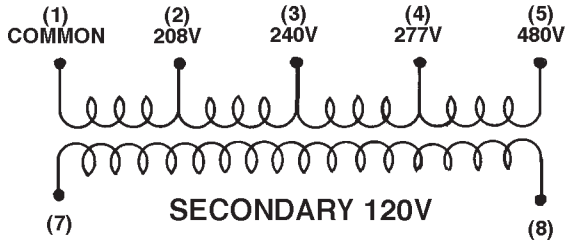

Figure 6. Transformer Secondary Loop

VOLTS	LINE ON	LOAD ON
208	COMMON & 208	SECONDARY 120V
240	COMMON & 240	
277	COMMON & 277	
480	COMMON & 480	

Figure 7. Transformer Secondary Line Volts

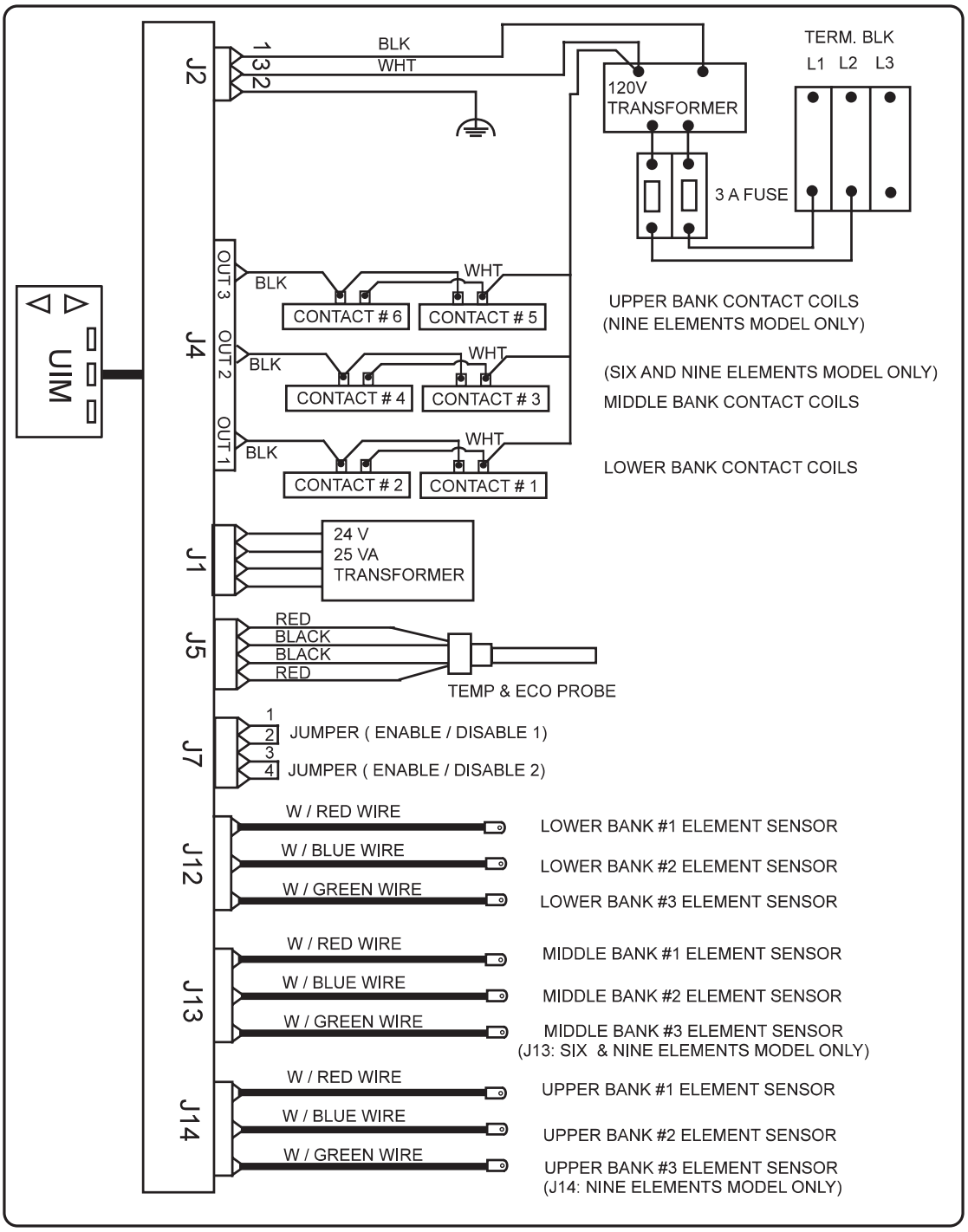

Figure 8. CCB (Central Control Board) Control Circuit Diagram - Electronic Control Models

POWER CIRCUIT DIAGRAMS - ELECTRONIC CONTROL MODELS

The water heater's electrical components are pictured and identified on page 7. The following describes the heater circuits and includes wiring diagrams. All heater circuits are designed for 60/50 hertz alternating current. The water heater circuit wiring is 12 AWG, AWM, or TEW type, rated 600 volts, 105°C. Fusing consists of three 30 amp fuses for each contactor. Fusing is an optional feature for Canadian models.

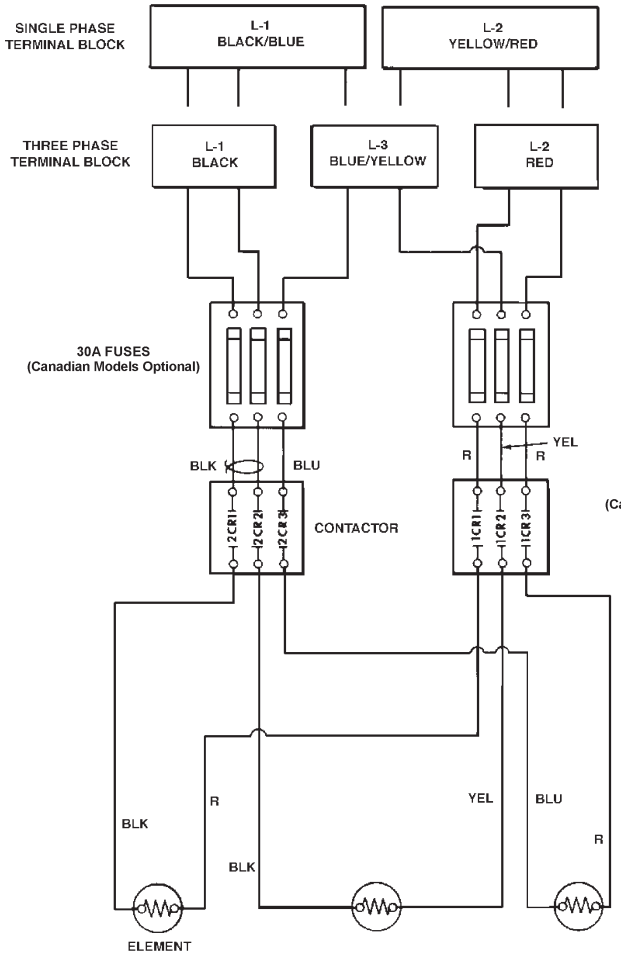

THREE ELEMENTS - SINGLE AND THREE PHASE

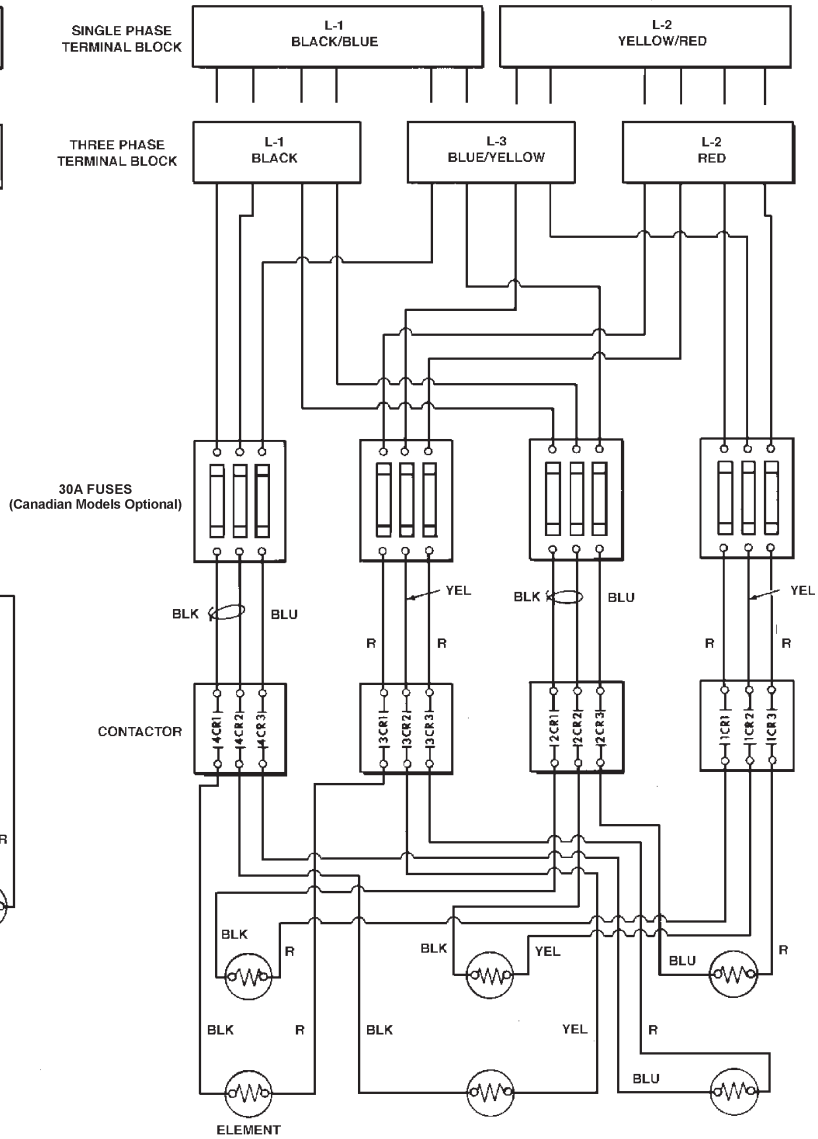

SIX ELEMENTS - SINGLE AND THREE PHASE

Figure 9. Three- and Six-Element Single- and Three-Phase Power Circuits

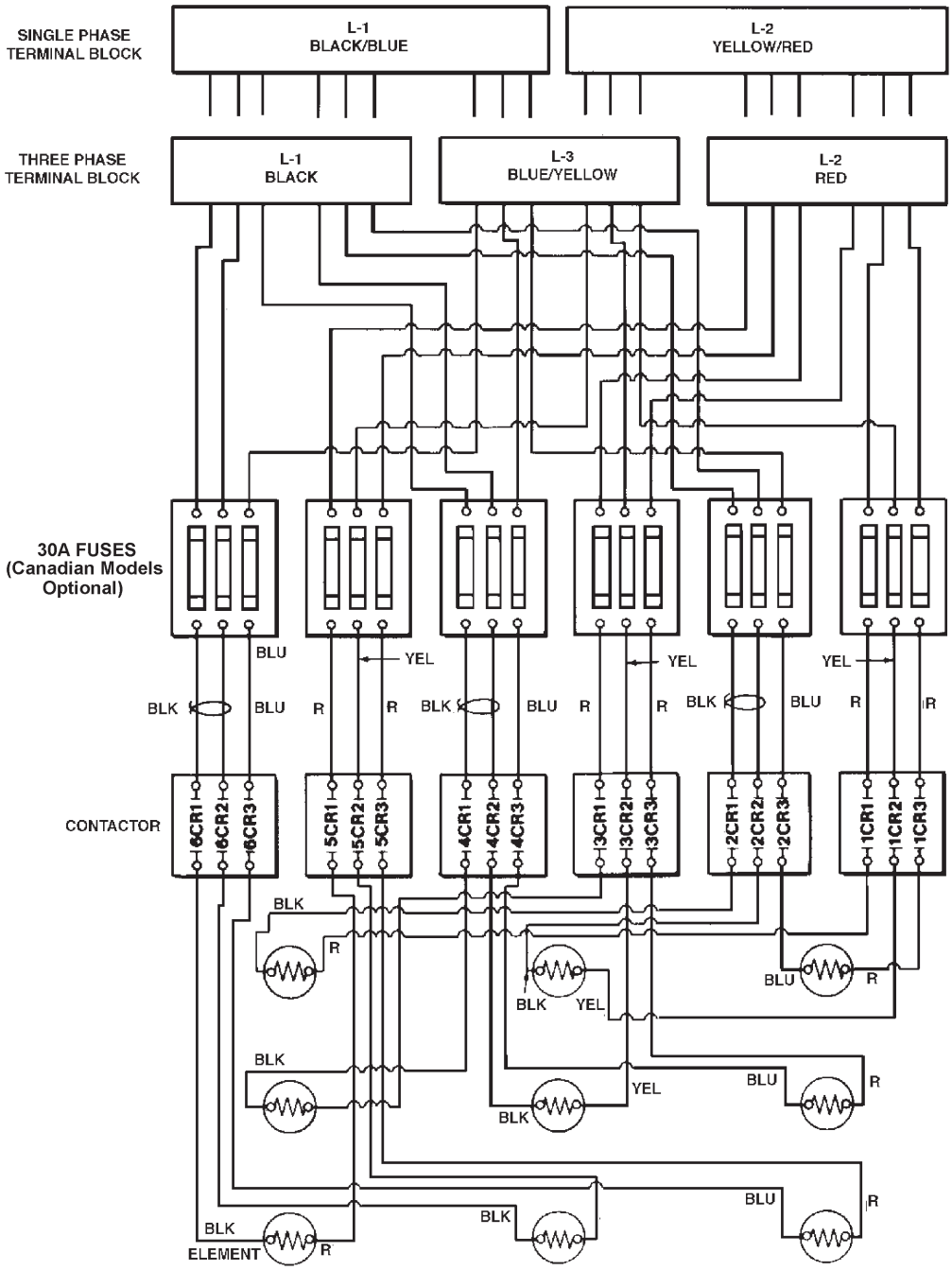

Figure 10. Nine-Element Single- and Three-Phase Power Circuits

CONVERSION TO SINGLE PHASE

When the heater is shipped for connection to a three-phase electrical service, it may be connected to a single-phase electrical service of the same voltage by:

1. Disconnect blue wires and yellow wires from terminal L3.
2. Reconnect all blue wires to terminal L1 (with black wires).
3. Reconnect all yellow wires to terminal L2 (with red wires).
4. Connect incoming power to terminals L1 and L2.

CONVERSION TO THREE PHASE

When heater is shipped for connection to a single-phase electrical service, it may be connected to a three-phase electrical service of the same voltage by:

1. Disconnect blue wires from terminal L1.
2. Disconnect yellow wires from terminal L2.
3. Reconnect all blue wires and yellow wires to terminal L3.
4. Connect incoming power to terminals L1, L2, and L3.

WIRING DIAGRAMS

POWER CIRCUIT DIAGRAMS - SURFACE MOUNT CONTROL MODELS

The water heater's electrical components are pictured and identified on page 8. The following describes the heater circuits and includes wiring diagrams. All heater circuits are designed for 60/50 hertz alternating current. The water heater circuit wiring is 12 AWG, AWM, or TEW type, rated 600 volts, 105°C. Fusing consists of two 30 amp fuses for each element. Fusing is an optional feature for Canadian models.

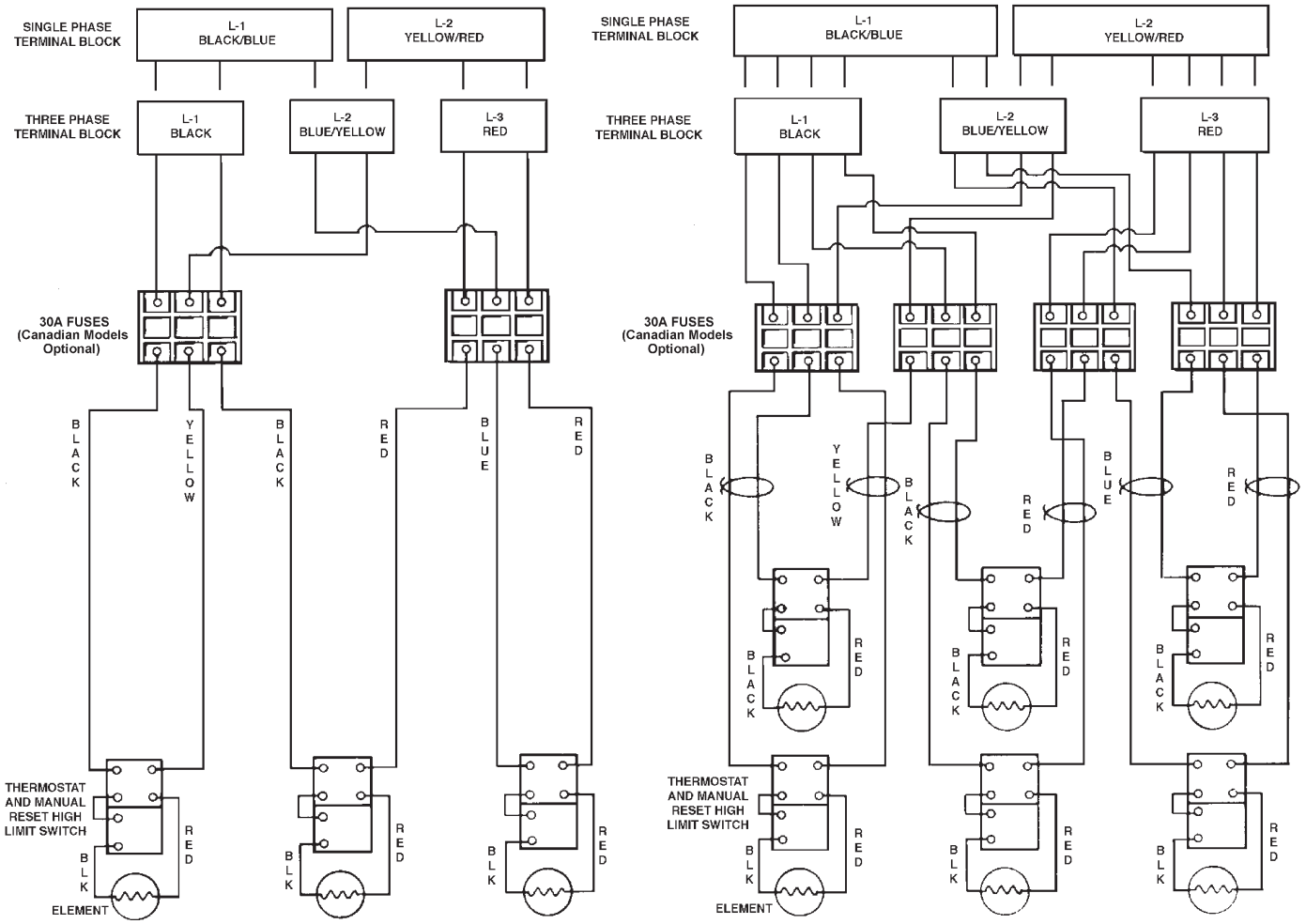

THREE ELEMENTS - SINGLE AND THREE PHASE

SIX ELEMENTS - SINGLE AND THREE PHASE

Figure 11. Three- and Six-Element Single- and Three-Phase Power Circuits

WIRING DIAGRAMS

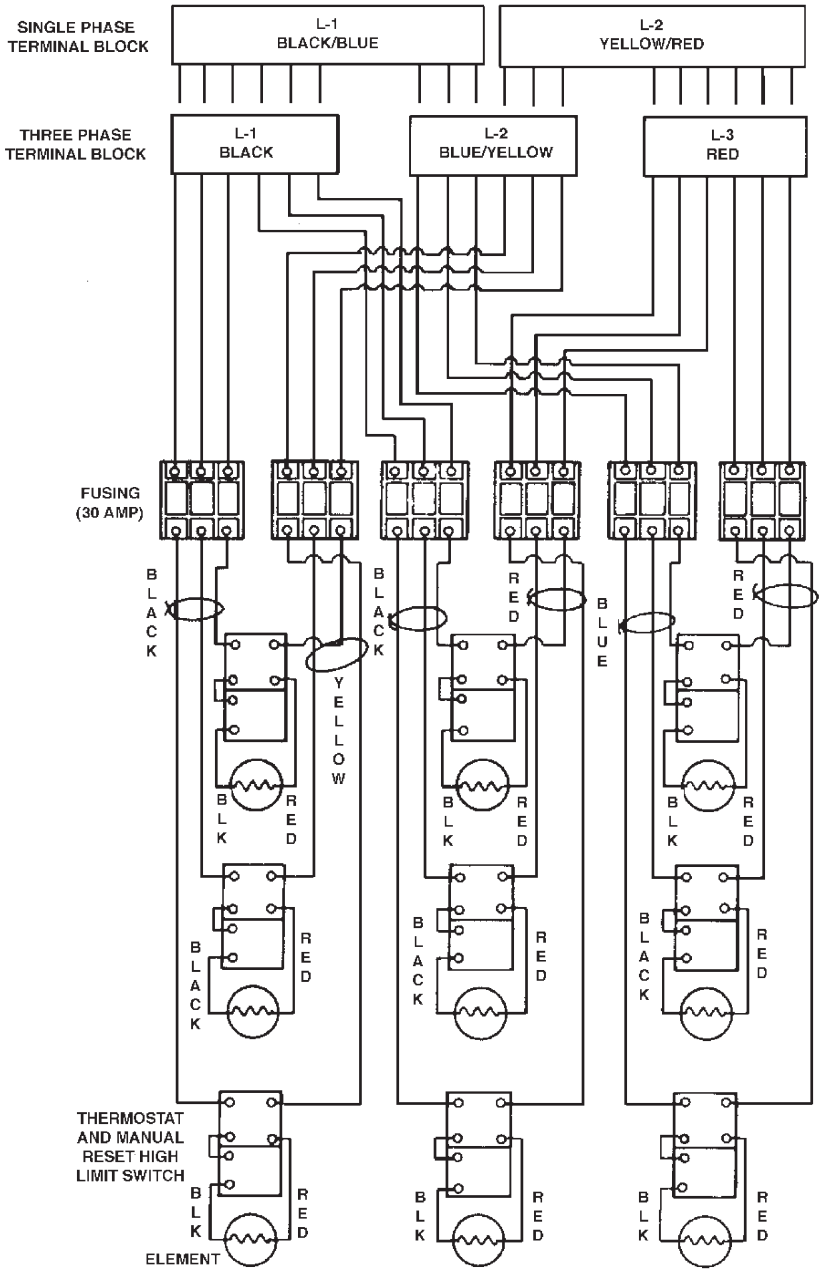

Figure 12. Nine Elements - Single And Three Phase

CONVERSION TO SINGLE PHASE

When the heater is shipped for connection to a three-phase electrical service, it may be connected to a single-phase electrical service of the same voltage by:

1. Disconnect blue wires from terminal L2.
2. Connect all blue wires to terminal L1 (with black wires).
3. Disconnect all red wires from terminal L3.
4. Connect all red wires to terminal L2 (with yellow wires).
5. Connect incoming power to terminals L1 and L2.

CONVERSION TO THREE PHASE

When heater is shipped for connection to a single-phase electrical service, it may be connected to a three-phase electrical service of the same voltage by:

1. Disconnect blue wires from terminal L1
2. Disconnect red wires from terminal L2.
3. Connect all blue wires to terminal L2 (with yellow wires).
4. Connect red wires to terminal L3.
5. Connect incoming power to terminals L1, L2 and L3.

OPERATION

GENERAL

Refer to the Features and Components section of this manual (pages 7 & 8) for the location of components mentioned in the instructions that follow.

NEVER turn on power to the water heater without being certain the water heater is filled with water and a temperature and pressure relief valve is installed in the relief valve opening.

DO NOT TEST ELECTRICAL SYSTEM BEFORE HEATER IS FILLED WITH WATER. FOLLOW FILLING AND START-UP INSTRUCTIONS IN OPERATION SECTION.

⚠DANGER

Full power is present whenever the cabinet door is opened even with the pilot switch turned off.

CAUTION

Property Damage Hazard

- Avoid water heater damage.
- Fill tank with water before operating.

FILLING THE WATER HEATER

1. Turn off the electrical disconnect switch.
2. Close the water heater drain valve.
3. Open a nearby hot water faucet to permit the air in the system to escape.
4. Fully open the cold water inlet pipe valve allowing the heater and piping to be filled.
5. Close the hot water faucet as water starts to flow. The heater is now ready for STARTUP and TEMPERATURE REGULATION.

INITIAL START UP

The following checks should be made by the installer when the heater is placed into operation for the first time.

1. Turn off the electrical disconnect switch.
2. Open the front panel, check all water and electrical connections for tightness. Also check connections on top and side of heater. Repair water leaks and tighten electrical connections as necessary.
3. Depress the red manual reset button on each Thermostat/ ECO combination control (Surface Mount Control Models only).
4. Turn on the electrical disconnect switch.
5. Observe the operation of the electrical components during the first heating cycle. Use care as the electrical circuits are energized.
6. Close the front panel.

Temperature control and contactor operation should be checked by allowing heater to come up to temperature and shut off automatically. **Use care as the electrical circuits are energized.**

DRAINING THE WATER HEATER

It is recommended that the water heater storage tank be drained and flushed every 6 months to reduce sediment buildup. The water heater should be drained if being shut down during freezing temperatures. See Features And Components in this manual for the location of the water heater components described below.

⚠DANGER

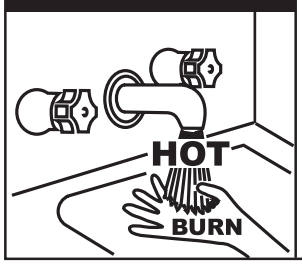

- Burn harzard.
- Hot water discharge.
- Keep hands clear of drain valve discharge.

TO DRAIN THE WATER HEATER STORAGE TANK:

1. Turn off the electrical supply to the water heater at the breaker or disconnect switch.
2. Ensure the cold water inlet valve is open.
3. Open a nearby hot water faucet and let the water run until the water is no longer hot.
4. Close the cold water inlet valve to the water heater.
5. Connect a hose to the water heater drain valve and terminate it to an adequate drain.
6. Open the water heater drain valve and allow all the water to drain from the storage tank.
7. Close the water heater drain valve when all water in the storage tank has drained.
8. Close the hot water faucet opened in Step 3.
9. If the water heater is going to be shut down for an extended period, the drain valve should be left open.

HIGH TEMPERATURE LIMIT CONTROLS (ECO)

Both the ELECTRONIC CONTROL and SURFACE MOUNT CONTROL model water heaters are equipped with one or more ECO (energy cut out) non adjustable high temperature limit control(s). An ECO is a normally closed switch that opens (activates) on a rise in temperature. If the ECO switch contacts open (activate) due to abnormally high water temperatures it will lock-out and disable further heating element operation. It is important that a qualified service agent be contacted to determine the reason for the ECO activation before resetting the ECO. Once the reason has been determined and corrected the ECO(s) can be reset as follows:

SURFACE MOUNT CONTROL MODELS

Surface Mount Control models have multiple surface mounted Thermostat/ECO combination controls. One for each installed heating element - see the Surface Mount Control wiring diagrams in this manual. The ECO high temperature limit switch contacts on each control will open when the tank temperature reaches approximately 200°F/93°C. When the ECO switch contacts open (activate) voltage to ONE heating element ONLY is terminated to prevent further heating operation of that element. Voltage may still be present at other heating elements and they may still be heating the water.

The ECO is a manual reset switch. Should one or more ECO activate, the tank temperature must drop below 120°F/49°C before an ECO can be reset. To manually reset an ECO:

1. Disconnect the power supply to the water heater.
2. Allow the tank temperature to cool below 120°F/49°C.
3. Remove the front control cover from the effected control(s).
4. Press the manual reset button on each of the effected controls.

Once the control(s) has been reset the control cover should be replaced prior to restoring power to the water heater.

ELECTRONIC CONTROL MODELS

The ECO high temperature limit switch is located inside the immersion Temperature Probe (two red wires) on ELECTRONIC CONTROL models. The ECO switch contacts will open when the water temperature reaches approximately 202°F/94°C. When the ECO switch contacts open (activate) the electronic control system locks out and displays a Fault message. Voltage to the contactor coils and heating elements is terminated to prevent further heating operation.

Should the ECO activate, the water temperature must drop below 140°F/60°C before the control system can be reset. Once the water temperature has cooled below this point the power supply to the water heater must be turned off and on again to reset the control system.

THERMOSTAT CONTROLS

The water heaters covered in this instruction manual are equipped with adjustable thermostat controls to control water temperature. Hot water temperatures required for automatic dishwasher and laundry use can cause scald burns resulting in serious personal injury and/or death. The temperature at which injury occurs varies with the person's age and duration of exposure. The slower response time of children, the elderly or disabled persons increases the hazards to them. Never allow small children to use a hot water tap or draw their own bath water. Never leave a child or disabled person unattended in a bathtub or shower.

The water heater should be located in an area where the general public does not have access to set temperatures.

Setting the water heater temperatures at 120°F will reduce the risk of scalds. Some States require settings at specific lower temperatures.

THERMOSTAT SETTINGS - SURFACE MOUNT CONTROL

⚠ DANGER

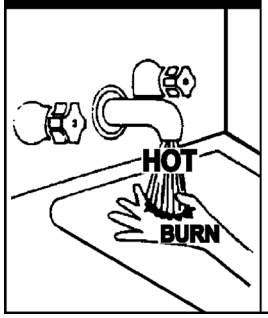

Water temperature over 125°F (52°C) can cause severe burns resulting in severe injury or death.

Children, the elderly, and the physically or mentally disabled are at highest risk for scald injury.

Feel water before bathing or showering.

Temperature limiting valves are available.

Read instruction manual for safe temperature setting.

These models have multiple thermostat/ECO combination controls one for each heating element installed. These thermostats are set from the factory at 140°F/60°C. Set the thermostat dial at the lowest setting which produces an acceptable hot water supply. This will always give the most energy efficient operation.

The water heater is supplied with thermostats that may come from different manufactures and have different temperature indications as described below.

THERMODISC

Thermodisc thermostats are adjustable from approximately 120°F (49°C) (lowest setting) to 181°F (83°C) (highest setting) see ***Figure 13***. These thermostats are set from the factory at approximately the 140°F (60°C) setting. The over temperature device (ECO high limit) attached to each thermostat has a manual reset.

APCOM THERMOSTATS

Apcom thermostats have three designated set points; LO, MED and HI. See ***Figure 14***.The approximate equivalent temperatures for these three settings are: LO = 140°F (60°C), MED = 160°F (71°C) and HI = 181°F (83°C). These thermostats are set from the factory at the Low 140°F (60°C) setting. The over temperature device (ECO high limit) attached to each thermostat has a manual reset setting.

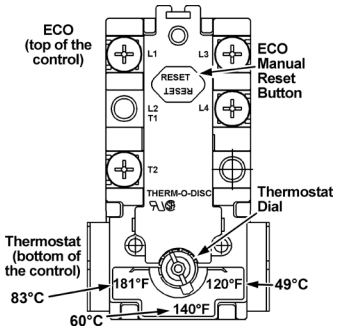

Figure 13. Thermodisc Thermostat Controls

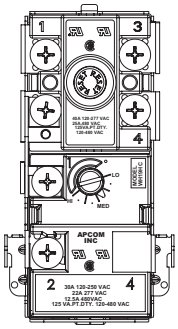

Figure 14. APCOM Thermostat Controls

Table 5 shows the approximate time-to-burn relationship for normal adult skin.

Table 5. Time to Burn Relationship for Normal Adult Skin

Water Temperature °F	Time for 1st Degree Burn (Less Severe Burns)	Time for Permanent Burns 2nd & 3rd Degree (Most Severe Burns)
110	(normal shower temp.)	
116	(pain threshold)	
116	35 minutes	45 minutes
122	1 minute	5 minutes

Table 5. Time to Burn Relationship for Normal Adult Skin

Water Temperature °F	Time for 1st Degree Burn (Less Severe Burns)	Time for Permanent Burns 2nd & 3rd Degree (Most Severe Burns)
131	5 seconds	25 seconds
140	2 seconds	5 seconds
149	1 second	2 seconds
154	instantaneous	1 second
(U.S. Government Memorandum, C.P.S.C., Peter L. Armstrong, Sept. 15,1978)		

THERMOSTAT SETTINGS - ELECTRONIC CONTROLS

⚠DANGER

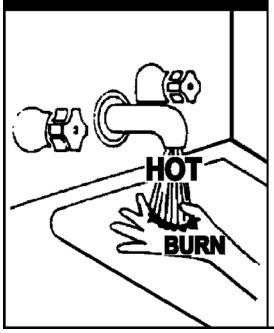

Water temperature over 125°F (52°C) can cause severe burns resulting in severe injury or death.

Children, the elderly, and the physically or mentally disabled are at highest risk for scald injury.

Feel water before bathing or showering.

Temperature limiting valves are available.

Read instruction manual for safe temperature setting.

These models are equipped with an electronic control system.

The control system senses temperature from a factory installed Immersion Temperature Probe (see ***Figure 3***). The "Operating Set Point" is adjusted to control water temperature. This is an adjustable user setting in the control system's "Temperatures Menu." This and all control system menus are accessed through the UIM (User Interface Module - see ***Figure 15***) located on the front panel of the water heater.

The Operating Set Point is adjustable from 90°F/42°C to 190°F/88°C. The factory setting is 120°F/49°C. See the Electronic Control Models Operation section of this manual for instructions on how to adjust the Operating Set Point and other user settings.

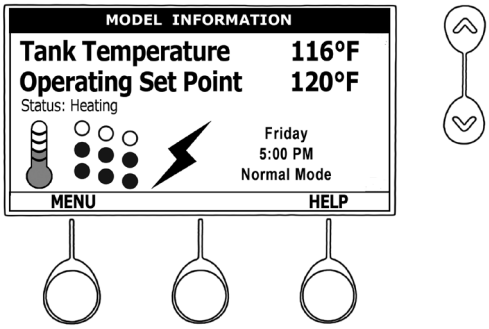

Figure 15. UIM (User Interface Module)

Set the Operating Set Point at the lowest setting which produces an acceptable hot water supply. This will always give the most energy efficient operation.

ELECTRONIC CONTROL MODELS OPERATION

CONTROL SYSTEM FEATURES

Advanced Diagnostics: Plain English text and animated icons display detailed operational and diagnostic information. LCD screen on the front of the water heater displays the Sequence of Operation in real time. Fault or Alert messages are displayed when operational problems occur. Advanced Service menu displays a list of possible causes for current Fault and Alert conditions to aid in servicing.

Economy Mode Operation: Control system automatically lowers the Operating Set Point by a programmed value during user defined time periods. Helps reduce operating costs during unoccupied or peak demand periods.

Linear Sequencing: Banks of heating elements (3 elements per bank) are energized according to adjustable (1 to 20°) differential set points for each bank. First bank on is the last bank off. Helps reduce operating costs during low/moderate loads.

CONTROL SYSTEM NAVIGATION

The UIM (User Interface Module) is located on the front cabinet of the Electronic Control Model water heaters. All operational information and user settings are displayed and accessed using the UIM. The UIM includes five snap acting (momentary) user input buttons; an Up, Down and 3 Operational Buttons.

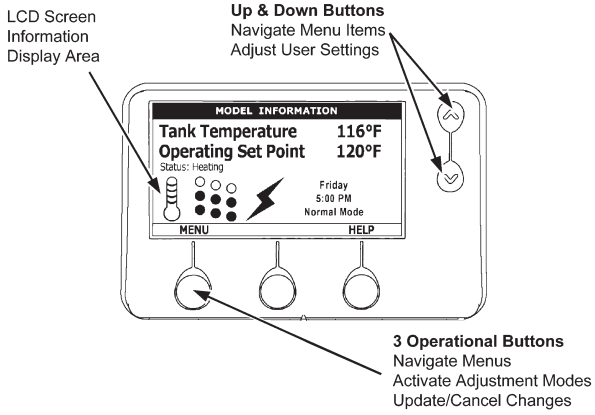

Figure 16. UIM - USER INTERFACE MODULE

UP & DOWN BUTTONS

Used to navigate (up and down) and to select (highlight) menu items. Also used to adjust or change (increase/decrease, on/off, set time) various user settings.

OPERATIONAL BUTTONS

The 3 Operational Buttons are multifunctional. Their current function is defined by the text that appears above each button on the LCD screen. The function will change depending on what menu is currently displayed or what menu item is selected. When no text appears on the LCD screen above an Operational Button there is no function assigned.

THE DESKTOP SCREEN

Figure 17 below shows the control system "Desktop Screen." This is the default screen. If there are no active Fault or Alert conditions and no user input for approximately 10 minutes the control system will return to this screen automatically.

Model Information: Model information and menu titles are shown in the black bar at the top of the Desktop Screen.

Tank Temperature: Current water temperature as sensed from the immersion Temperature Probe.

Operating Set Point: Temperature at which the control system will maintain tank (water) temperature in the Normal Mode. This line of text will read **Economy Set Point** whenever the control system is operating in the Economy Mode.

Status: The Operating State of the control system is displayed beneath the Operating Set Point.

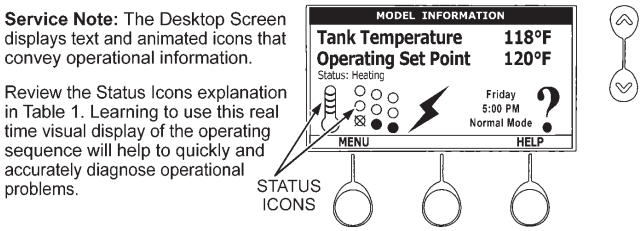

Figure 17. Control System Desktop

Menu: The left Operational Button is pressed to enter the Main Menu where all control system menus are accessed. See ***Table 8*** for a list of control system menus.

Help: The right Operational Button is pressed to access instructions and explanations for user settings, Operating States, Status Icons, manufacturer's web address, technical support phone number and service agent contact information.

Day/Time/Operating Mode: The current time and day are also displayed on the Desktop Screen. "Clock Not Set" will be displayed until the time clock has been initially set. Day and Time are adjusted in the Economy Mode Setup menu. The current Operating Mode, either Normal Mode or Economy Mode, is displayed beneath the day and time.

Discreet Menu Contact Information: From the Desktop Screen press and hold down the middle (unmarked) Operational Button for 30 seconds and then release it. This will launch a discreet menu where personalized contact information can be entered. Installing contractors and/or service agents can enter their company name and telephone number. This contact information will be displayed with all Fault and Alert messages.

Table 6. Status Icons

Icon	Description
	Water temperature in the tank has fallen. Shaded area of the animated thermometer icon will rise and fall in response to water temperature in the storage tank as sensed from the immersion Temperature Probe.
	Water temperature in the tank has reached the Operating Set Point. Shaded area of the animated thermometer icon will rise and fall in response to water temperature in the storage tank as sensed from the immersion Temperature Probe.
	The control is unable to initiate a heating cycle. This will happen whenever a Fault condition is detected by the control system or when either of the two Enable/Disable circuits are open circuits.
	The control system is in Heating Mode and has energized the electromagnetic contactor coils for at least one bank of heating elements. This animated icon DOES NOT indicate current has been sensed from the heating elements, only that there is a call for heat present and the control system has initiated heating operation.
○ ○ ○	Heating elements icon for a water heater equipped with 1 Bank of heating elements. Each circle represents one heating element. Each diagonal row of 3 elements = 1 Bank of elements. Open circles represent heating elements the control system has not energized and is not sensing electrical current from.
○ ○ ○ ○ ○ ○	Heating elements icon for a water heater equipped with 2 Banks of heating elements. Each circle represents one heating element. Each diagonal row of 3 elements = 1 Bank of elements. Open circles represent heating elements the control system has not energized and is not sensing electrical current from.
○ ○ ○ ○ ○ ○ ○ ○ ○	Heating elements icon for a water heater equipped with 3 Banks of heating elements. Each circle represents one heating element. Each diagonal row of 3 elements = 1 Bank of elements. Open circles represent heating elements the control system has not energized and is not sensing electrical current from.
● ● ● ● ● ● ● ● ●	Heating elements icon for a water heater equipped with 3 Banks of heating elements. Each circle represents one heating element. Each diagonal row of 3 elements = 1 Bank of elements. Filled circles represent heating elements the control system has energized AND is sensing electrical current from.
⊠ ⊠ ⊠ ⊠ ⊠ ⊠ ⊠ ⊠ ⊠	Heating elements icon for a water heater equipped with 3 Banks of heating elements. Each circle represents one heating element. Each diagonal row of 3 elements = 1 Bank of elements. Open circles with an X represent heating elements the control system has energized that it IS NOT sensing electrical current from.
!	The control has detected/declared a Fault Condition. Fault message details can be viewed in the Current Fault menu. Heating operation is discontinued (locked out) until the condition that caused the fault is corrected. Power to the water heater must be cycled off and on to reset the control system. Note: Cycling power will not reset the control system if the condition that caused the fault has not been corrected.
?	The control has detected/declared an Alert Condition. The water heater will continue to operate during an Alert Condition but there is an operational condition that requires the attention of a Qualified Service Agent. Alert message details can be viewed in the Current Alert menu.

Table 7. Operating States	
State	**Description**
Standby	The water heater is not in an active heating cycle. This usually indicates the temperature in the tank has reached the Operating Set Point and the control system has terminated the heating cycle.
Heating	The control system is in the Heating Mode. At least one bank of heating elements has been energized.
Alert	The control system has detected/declared an Alert Condition. The controls system will continue heating operation. However, a Qualified Service Agent should be contacted to check/service the water heater.
Fault	The control system has detected/declared a Fault Condition. The control system will discontinue heating operation and “lock out.” Power to the water heater must be cycled off and on to reset the control system. Note; cycling power will not reset the control system until the condition that caused the fault has been corrected.

Table 8. Control System Menus	
Menus	**Description**
Temperatures	Most commonly accessed menu. Operating Set Point, Differential settings, Tank Temperature and Tank Probe Offset are located in this menu.
Heater Status	Current Operating State/Mode (heating/standby etc) and status (open/closed - on/off - yes/no) of monitored water heater functions and components are displayed in this menu.
Economy Mode Setup	Seven day 24 hour time clock with temperature set back capability to reduce operating costs during unoccupied or reduced demand periods.
Alarm Output Setup	The control system’s CCB (Central Control Board) features on board SPDT (single pole double throw) relay contacts for building EMS (Energy Management System) notification of operational conditions such as Fault Conditions and heating mode status. This menu features a list of user definable conditions for relay activation.
Display Settings	Temperature units (°F or °C), appearance (brightness contrast) and backlight delay user adjustable settings are located in this menu.
Heater Information	Elapsed time of operation, total heating cycle time, heating cycle count, heating element bank(s) cycle count and heating bank on time along with UIM and CCB software revisions can be viewed in this menu.
Current Fault/Alert	Displays any current Alert or Fault messages.
Fault History	Retains 9 event history of Fault/Alert messages with time stamp. The Fault History is useful when dealing with intermittent operational problems or when the customer has reset the control system prior to a service agent’s arrival.
Fault Occurrence	Running total of all Fault and Alert Conditions that have occurred are displayed in this menu. Can help determine potential root cause(s) of related operational problems.
Restore Factory Defaults	This control system feature allows the user to restore control system user settings to their factory default settings. Alarm Output Setup and Display Settings menu items ARE NOT changed when factory defaults restored.
Help Menu	Accessible by pressing the corresponding Operational Button from most menus and screen displays. This menu provides access to instructions and explanations for user settings, Operating States, Status Icons, manufacturer’s web address, technical support phone number and service agent contact information.

TEMPERATURES MENU

OPERATING SET POINT

User adjustable setting 90°F to 190°F range; factory default is 120°F. When the water temperature sensed by the control system from the immersion Temperature Probe reaches the Operating Set Point the control system will end the heating cycle. A call for heat will be activated again when the water temperature drops below the Operating Set Point minus the 1st Differential Setting.

Example: Operating Set Point is 120°F, the 1st Differential Setting is 2°F (factory default). A call for heat will be activated when the sensed water temperature drops to 118°F.

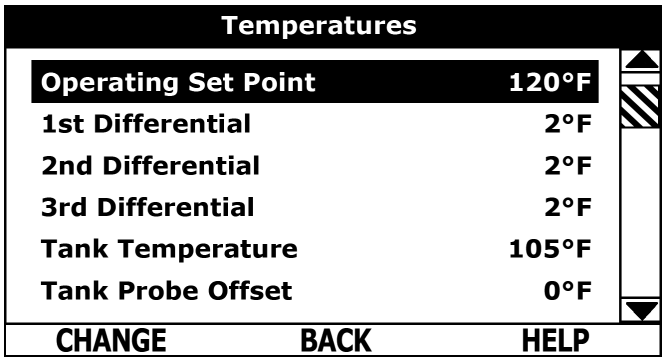

DIFFERENTIAL SETTINGS

Adjustable user setting(s) 1°F to 20° range; factory default is 2°F. The water heaters covered in this Instruction Manual will have 3, 6 or 9 heating elements. Each group of 3 heating elements is one "Bank" of heating elements. Heating elements are energized in Banks of 3. Each Bank of heating elements will have a Differential Setting associated with it. Differential Settings are located in the Temperatures Menu.

There is a 1st Differential Setting on all models. There will be one additional Differential Setting visible/adjustable for each additional Bank of (3) heating elements.

OPERATING SEQUENCE

With an Operating Set Point of 120 °F and all Differential settings at 2 °F, the On/Off sequencing of heating element Banks would be as follows:

BANK NUMBER	DIFFERENTIAL SETTING	TURN ON TEMP	TURN OFF TEMP
Bank 1	2°F	118°F	120°F
Bank 2	2°F	116°F	118°F
Bank 3	2°F	114°F	116°F

TANK TEMPERATURE

Non adjustable information display. Current water temperature as sensed by the control system from the immersion Temperature Probe.

TANK PROBE OFFSET

User adjustable setting -5°F to +5°F range; factory default is 0°F. If the current Tank Temperature is sensed (from the immersion Temperature Probe) at 120°F and the offset is adjusted to -5°F the control system would calibrate or "offset" the Tank Temperature to 115°F. Heating cycles would then start/stop based on the calibrated Tank Temperature.

Used to calibrate for slight differences in control system temperature sensing. This can improve the precision of temperature control in the storage tank and at points of use. This feature can also be used to compensate for building recirculation loops (hot water returning to the storage tank) that may cause the heating cycle to terminate prematurely.

TEMPERATURE SETTINGS

The Operating Set Point and the Differential Settings are adjusted in the Temperatures Menu. The following instructions explain how to adjust these user settings and navigate the control system menus.

Table 9. Changing Temperature Settings from the Desktop Screen

ACTION	DISPLAY
From the Desktop Screen, press the Operational Button underneath "MENU" to enter the Main Menu. Notice how the text above the Operational Buttons on the display changes as you navigate through the various menus and screens.	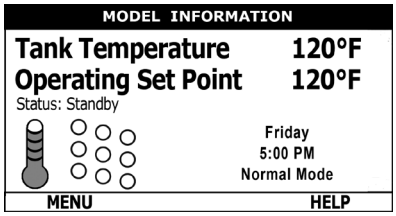
With Temperatures selected (highlight in black) in the Main Menu, press the Operational Button underneath "SELECT" to enter the Temperatures Menu. If Temperatures is not selected use the Up and Down buttons to select this menu item.	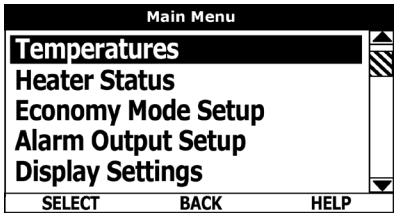
With the Operating Set Point selected in the Temperatures Menu, press the Operational Button underneath "CHANGE" to activate the adjustment mode for this menu item.	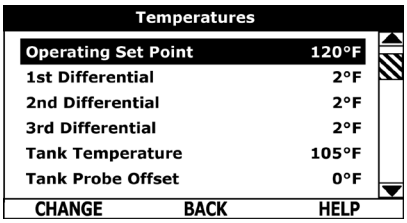
Press the Up and Down buttons to adjust the Operating Set Point to the desired setting. Press the Operational Button underneath "UPDATE" to confirm the new setting. Press the Operational Button underneath "CANCEL" to discard the new setting and retain the previous setting. The new Operating Set Point value should now be displayed as the current value. NOTE: Use this same procedure to adjust the Differential settings and the Tank Probe Offset in the Temperatures Menu. This same procedure is used to change user settings in other control system menus.	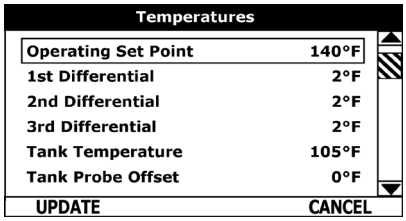 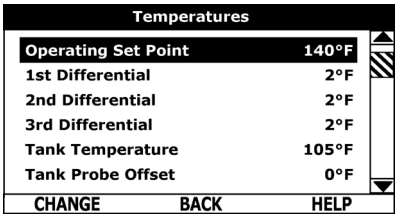

HEATER STATUS MENU

This menu displays non adjustable operational information. This menu contains more information that can be displayed on one screen of the LCD display. Use the Up & Down Buttons to navigate to the bottom of this menu.

Top of Menu

Heater Status	
Status	Heating
Element Banks On	1
ECO Contact	Closed
Enable / Disable 1	Closed
Enable / Disable 2	Closed
Element Bank 1 On	Yes
Element Bank 2 On	No
BACK	HELP

Bottom of Menu

Heater Status	
Enable / Disable 1	Closed
Enable / Disable 2	Closed
Element Bank 1 On	Yes
Element Bank 2 On	No
Element Bank 3 On	No
Alarm Condition	No
Alarm Relay Output	Open
BACK	HELP

STATUS

Displays the current Operating State of the control system. IE: Heating, Standby, Fault see ***Table 7.***

ELEMENT BANKS ON

Displays the current number of heating element Banks the control system has energized. Each Bank of elements contains 3 heating elements.

ECO CONTACT

Displays the current state of the ECO high temperature limit switch contacts. The ECO switch is located inside the immersion Temperature Probe (two red wires).

ENABLE / DISABLE 1 & 2

Displays the current state, open or closed, of the two Enable/ Disable circuits (J7 socket on the CCB - see wiring diagrams) provided for external supervisory controls such as building EMS (Energy Management System). Both of these Enable/Disable circuits must be closed to "enable" heating operation. If either Enable/Disable circuit is open for any reason heating operation will be "disabled." There is a plug with two jumper wires installed from the factory in the CCB J7 socket to enable heating operation when external controls are not in use.

Service Note: If a supervisory control(s) is used to enable/disable heating operation, install field wiring between the J7 socket on the CCB and a set of "dry contacts" on the external control per all applicable building codes. This is a switching circuit only: DO NOT apply any external voltage or connect any load (IE: relay coil) to either circuit.

ELEMENT BANK ON

Displays the on/off status of each Bank of heating elements. Yes = On, No = Off.

ALARM CONDITION

Displays the status of the user definable Alarm Output function - see Alarm Output Setup Menu. Yes = alarm condition has been met, No = alarm condition has not been met.

ALARM RELAY OUTPUT

Displays the state of the normally open contacts of the Alarm Output relay. This relay (J3 contacts on the CCB) is used for building EMS (Energy Management System) notification of operational conditions such as Fault conditions.

ECONOMY MODE SETUP MENU

This menu contains settings used to establish an "Economy Set Point" and "Economy Mode" operating periods. This control system feature can help reduce operating costs during unoccupied, low load, or peak demand periods.

Desktop Screen During Economy Mode

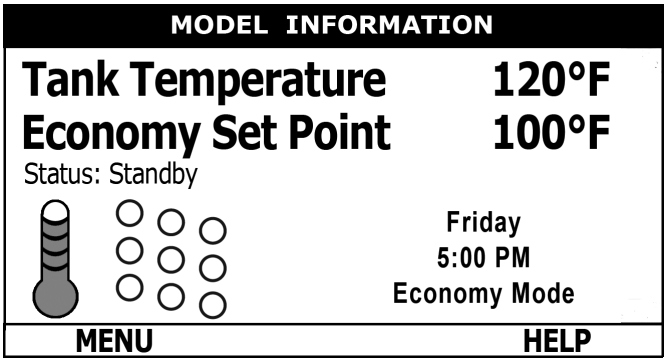

Economy Mode Setup Menu

Economy Mode Setup		
Setpoint Adjustment		20
Current Time		Mon 5:00 PM
Heater In Economy Mode		No
Sun		Economy Mode All Day
Mon	Normal	7:30 AM to 8:00 PM
Tue		Normal All Day
Wed		Normal All Day
CHANGE	BACK	HELP

SETPOINT ADJUSTMENT

Adjustable user setting (2°F to 50°F - factory default is 20°F) the control system uses to calculate the "Economy Set Point." The Economy Set Point = normal Operating Set Point minus the programmed Setpoint Adjustment value. The Economy Set Point is the water temperature the control system maintains during programmed Economy Mode time periods. "Economy Set Point" is displayed instead of "Operating Set Point" and "Economy Mode" appears beneath the current time on the Desktop Screen during Economy Mode time periods.

CURRENT TIME

Seven Day 24 hr clock. Use this menu item to set the current time and day of the week. Current day and time are not set from the factory. "Clock Not Set" will be displayed on the Desktop until the time/day has been initially set.

HEATER IN ECONOMY MODE

Displays whether the control system is currently operating in Economy Mode or not.

Daily Operating Mode (Sun - Mon - Tue - Wed - Thu - Fri - Sat)

Seven daily sub menus are listed at the bottom of the Economy Mode Setup menu. There are 3 Operating Modes in each sub menu; “Normal Operation All Day” - “Economy Mode All Day” and “Normal Operation Between.” Only one Operating Mode can be active, the factory default is Normal Operation All Day.

Normal Operation All Day: When this operating mode is active the normal Operating Set Point is used for the entire day.

Economy Mode All Day: When this operating mode is active the Economy Set Point is used for the entire day.

Normal Operation Between: When this operating mode is active there will also be start and stop times to program. The normal Operating Set Point is used between the programmed start and stop times and the Economy Set Point will be in effect during the rest of the day. There is one start time and one stop time event per day.

ECONOMY MODE SETTINGS

Table 10. Economy Mode Settings: Setpoint Adjustments

ACTION	DISPLAY
From the Desktop Screen, press the Operational Button underneath “MENU” to enter the Main Menu. Notice how the text above the Operational Buttons on the display changes as you navigate through the various menus and screens.	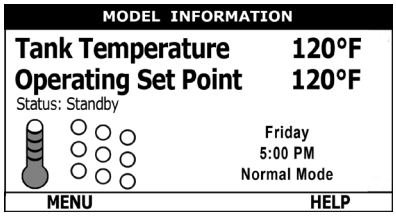
Use the Up/Down buttons to select (highlight in black) the Economy Mode Setup menu from the Main Menu. Press the Operational Button underneath “SELECT” to enter the Economy Mode Setup menu.	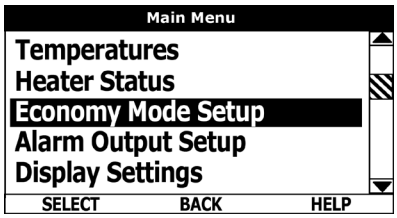
Use the Up/Down buttons to select (highlight in black) Setpoint Adjustment. Press the Operational Button underneath “CHANGE” to activate the adjustment mode for the Setpoint Adjustment value.	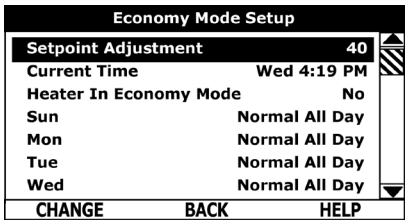
Use the Up/Down buttons to change the Setpoint Adjustment to the desired value. The Setpoint Adjustment value is adjustable from 2°F to 50°F. The factory default is 20°F. Notice how the text above the Operational Buttons on the display changes to “UPDATE” & “CANCEL” when the adjustment mode is activated and how the current value is outlined rather than highlighted in black. Press the Operational Button underneath “UPDATE” to enter and confirm the new value. Pressing the Operational Button underneath “CANCEL” would discard the new value and retain the previous value.	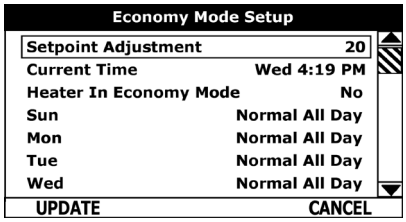
The new Setpoint Adjustment value should now be displayed as the current value.	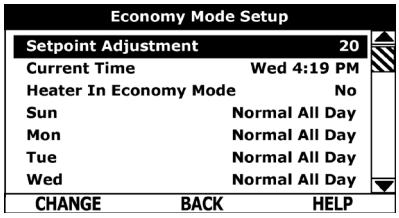

Table 11. Economy Mode Settings: Time Clock Settings	
ACTION	**DISPLAY**
From the Desktop Screen navigate to the Economy Mode Setup menu. Use the Up/Down buttons to select (highlight in black) Current Time sub menu. Press the Operational Button underneath “CHANGE” to enter the Current Time sub menu.	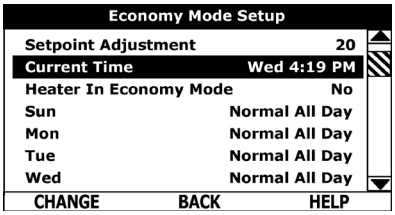
Use the Up/Down buttons to select the “Weekday” setting. Press the Operational Button underneath “CHANGE” to activate the adjustment mode for this setting.	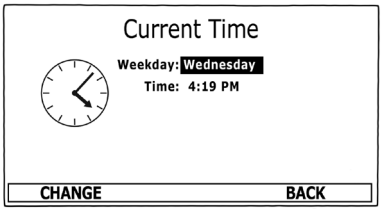
Press the Up and Down buttons to adjust the Weekday setting to the current day. Notice how the text above the Operational Buttons on the display changes to “ACCEPT” & “CANCEL” when the adjustment mode is activated and how the current setting is outlined rather than highlighted in black. Press the Operational Button underneath “ACCEPT” to enter and confirm the new setting. Pressing the Operational Button underneath “CANCEL” would discard the new setting and retain the previous setting.	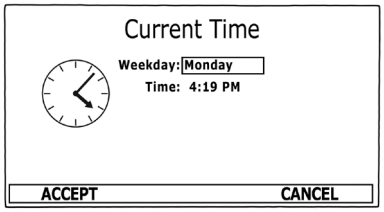
Use the Up/Down and the CHANGE/ACCEPT Operational Buttons to individually select and change the remaining time settings (Hour, Minutes, AM/PM) to the current time in the same way as outlined above. When finished making changes press the Operational Button underneath “BACK” to confirm all new settings and update the control system. The display will automatically return to the Economy Mode Setup menu.	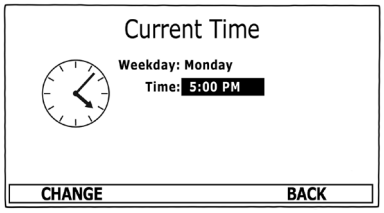
The new settings should be displayed as the Current Time.	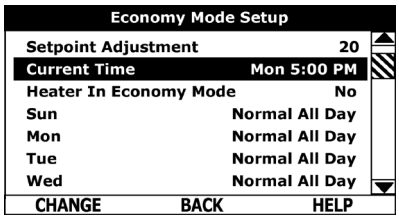

Table 12. Economy Mode Set Up: Daily Operating Mode Settings	
ACTION	**DISPLAY**
Economy Mode All Day: From the Economy Mode Setup menu use the Up/Down buttons to select (highlight in black) the Daily sub menu for “Sun.” Press the Operational Button underneath “CHANGE” to enter this menu.	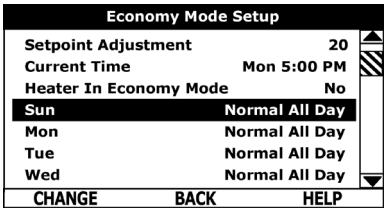
Use the Up/Down buttons to select (highlight in black) the “Economy Mode All Day” setting. Press the Operational Button underneath “SELECT” to change from the factory default Normal Operation All Day setting to the Economy Mode All Day setting. Press the Operational Button underneath “BACK” to confirm the new setting and update the control system. You will be returned to the Economy Mode Setup menu. The new setting should now be displayed for Sun.	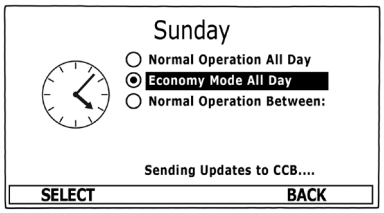 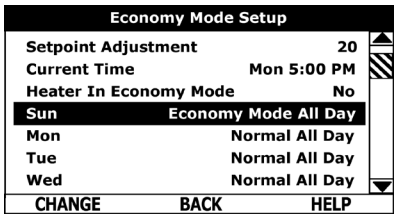
Normal Operation Between: From the Economy Mode Setup menu use the Up/Down and CHANGE buttons to enter the Mon sub menu. Use the Up/Down buttons to select (highlight in black) the “Normal Operation Between” setting. Press the Operational Button underneath “SELECT” to change the operating mode for Monday to Normal Operation Between. Note that when this setting is selected Start and Stop time user settings appear on the display. Use the Up/Down buttons to navigate between the Start and Stop time Hour, Minutes and AM/PM settings. With each item selected press the Operational Button underneath “SELECT” to activate the adjustment mode for each setting. Use the Up/Down buttons to change the value to the desired setting. Press the Operational Button underneath “ACCEPT” to enter the new setting or “CANCEL” to discard the new setting and retain the previous setting. Press the Operational Button underneath “BACK” to confirm the settings and update the control system. You will be returned to the Economy Mode Setup menu. The new settings should be shown for Mon.	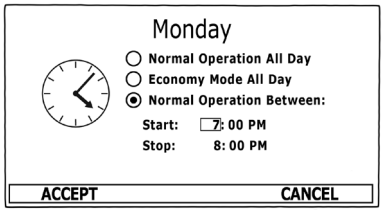 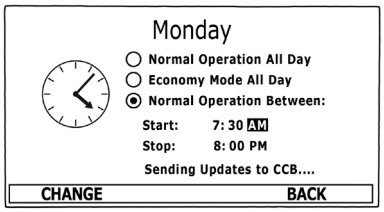 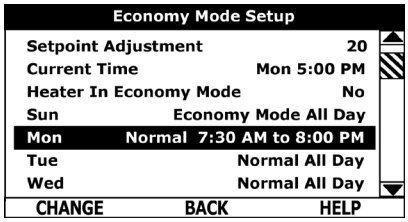

ALARM OUTPUT SETUP MENU

Permits user to set the condition (from a list of options) for when the CCB's integral alarm output relay will be energized. Alarm relay connections (common, normally open, normally closed) are located on the J3 terminal strip on the CCB. Alarm output relay contacts are capable of switching 1 amp maximum at 120 VAC.

The alarm relay operates in the background according to the settings in this menu and is not capable of disabling water heater operation. The alarm relay is used for external notification/ verification of various operational conditions such as fault conditions and heating mode status. This relay can be used with building EMS (Energy Management System) and other external supervisory controls.

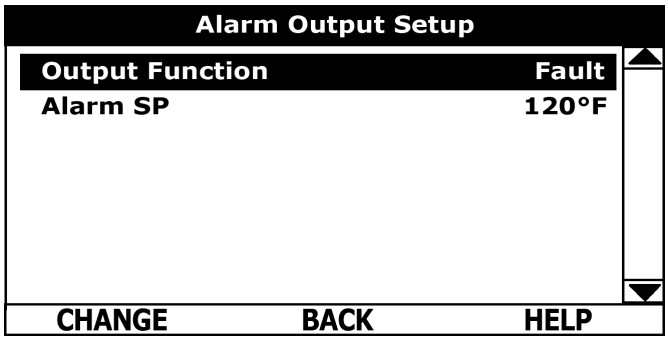

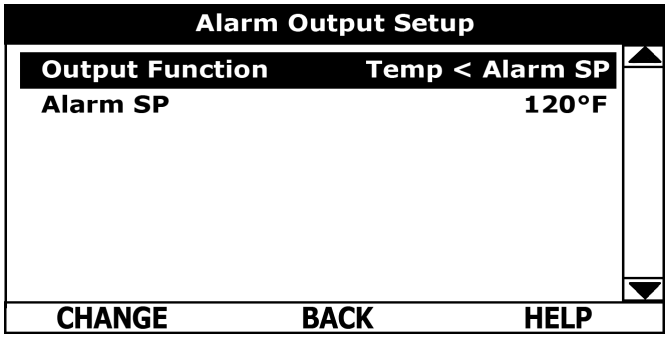

OUTPUT FUNCTION

Adjustable user setting. Available options for the Alarm Output Function setting are:

Heating Mode: Used for heating mode on/off status notification.

Enable / Disable Closed: Used for notification and/or verification of the enable/disable circuits open/closed status. There are two enable/disable circuits available for external supervisory control(s) at the J7 socket on the CCB - see wiring diagrams. Enable/disable circuit(s) status can be viewed in the Heater Status Menu.

Temp < Heater SP: Used for external notification when current tank temperature drops below Operating Set Point.

Temp < Alarm SP: Used for external notification when current tank temperature drops below programmable Alarm SP.

Fault or Alert: Used for external notification whenever a Fault or Alert condition is active.

Fault: Used for notification whenever a Fault condition is active.

Disabled: Disables the Alarm Relay Output Function.

Alarm SP: Adjustable user setting (90°F to 190°F) the control system uses for the "Temp < Alarm SP" function described above. This setting has no effect with any other Alarm Output functions.

Alarm Output Settings: Changing the user settings in this menu is done using the same methods for changing the Operating Set Point.

Service Note: Adjustable user settings in the Alarm Output Setup menu are unaffected by Restore Factory Defaults.

DISPLAY SETTINGS MENU

Permits user to set display options for viewing information on the UIM's LCD screen.

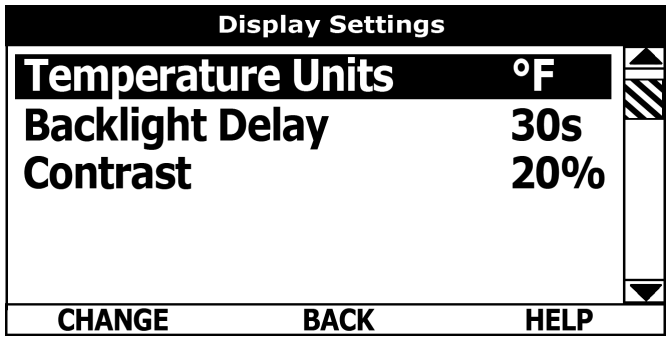

Temperature Units: Adjustable user setting that changes temperature units display to Celsius °C or Fahrenheit °F.

Backlight Delay: Adjustable user setting that determines how long the UIM's LCD backlight remains illuminated after a key has been pressed. Available settings are; Always Off, 10, 30 or 60 seconds and Always On.

Contrast: Adjustable user setting to adjust the UIM's LCD screen contrast between text and background.

Display Settings: Changing the user settings in this menu is done using the same methods for changing the Operating Set Point.

Service Note: Adjustable user settings in the Display Settings menu are unaffected by Restore Factory Defaults.

HEATER INFORMATION MENU

This menu displays non adjustable operational information.

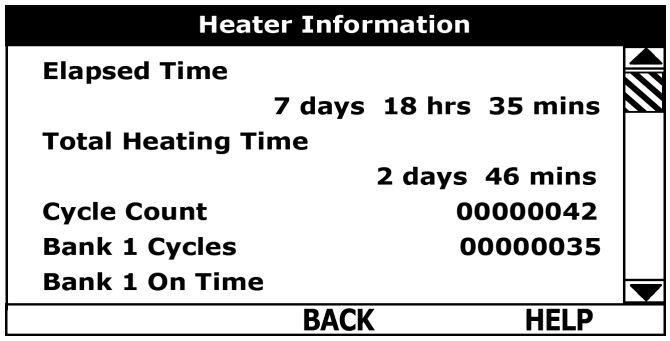

TOP OF MENU

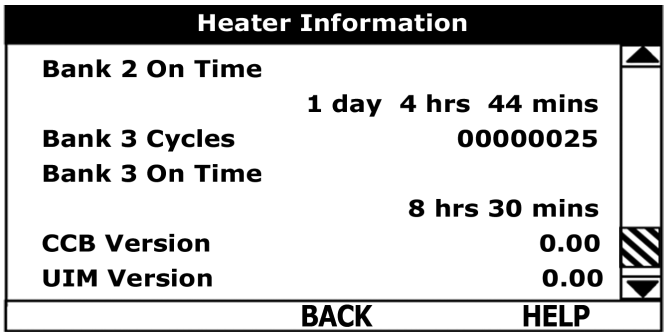

BOTTOM OF MENU

Elapsed Time: Total accumulated time the control system (water heater) has been energized.

Total Heating Time: Total accumulated time the control system has been in the heating mode. IE: any heating elements have been energized.

Bank # Cycles: Total accumulated count of heating cycles for each Bank of heating elements.

Bank # On Time: Total accumulated heating on time for each Bank of heating elements.

CCB Version: Software version for Central Control Board.

UIM Version: Software version for User Interface Module.

CURRENT FAULT / ALERT MENU

This menu displays non adjustable operational information. With the Fault History sub menu selected in Main Menu; press the Operational Button underneath "SELECT" to display the current Fault or Alert message. If there is not a Fault or Alert condition currently active "(none)" is displayed to the right of this menu.

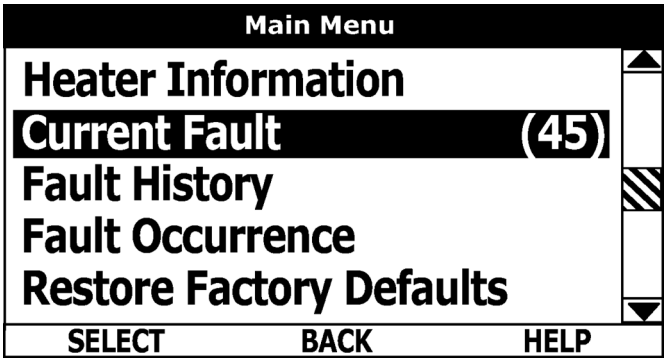

FAULT HISTORY MENU

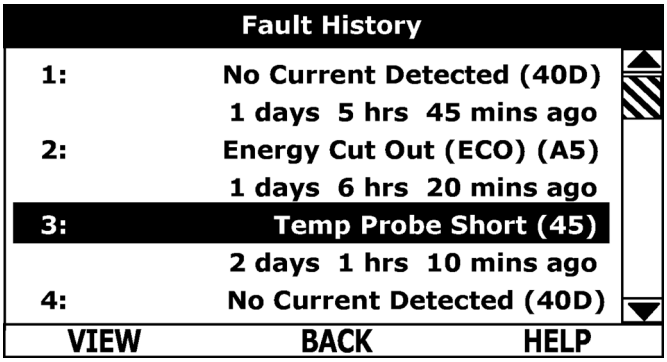

This menu displays non adjustable operational information. The control system records and stores the last 9 Fault and Alert messages in chronological order in this menu. The most recent will be at the top of the list. A time stamp is displayed below each listed Fault and Alert message showing when the Fault or Alert condition occurred.

The Fault History is useful when dealing with intermittent operational problems or when the customer has reset the control system prior to a service agent's arrival.

With a Fault or Alert item selected press the Operational Button underneath "VIEW" to display the details for the Fault or Alert message. The Fault/Alert message screen displays a brief description of the condition, contact information and access to the Advanced service information sub menu.

CURRENT / HISTORY FAULT MESSAGE

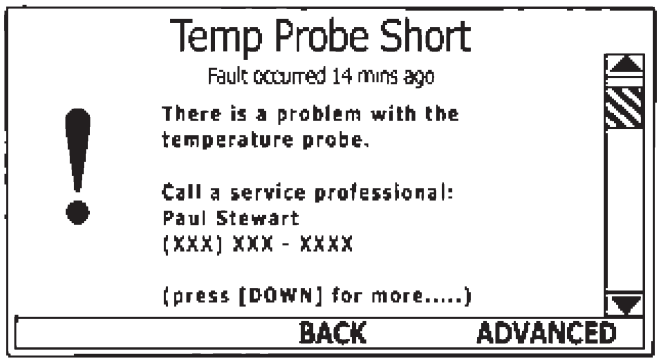

FAULT OCCURRENCE MENU

Total accumulated number each individual Fault condition has occurred is displayed in this menu. This running total of Fault Occurrences can be useful in determining which (if any) operational problems have been persistent.

FAULT OCCURRENCE MENU

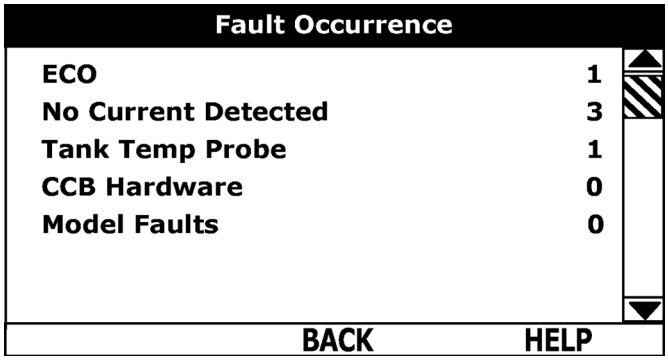

RESTORE FACTORY DEFAULTS MENU

This control system menu allows the user to restore most of the control system's user settings to their factory default settings. User settings in the Alarm Output Setup and Display Settings menus are unaffected by executing Restore Factory Defaults.

Table 13. Restore Factory Defaults

ACTION	DISPLAY
From the Main Menu use the Up/Down buttons to select (highlight in black) the "Restore Factory Defaults" menu. Press the Operational Button underneath "SELECT." The Restore Factory Defaults menu will be displayed.	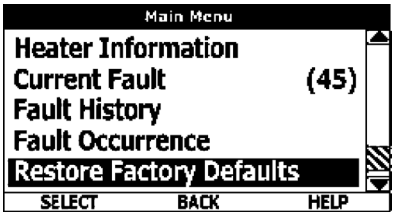
From the Restore Factory Defaults menu press the Operational Button underneath "YES." The display will show text confirming the factory default settings have been restored. Press the Operational Button underneath "BACK" to exit the Restore Factory Defaults menu.	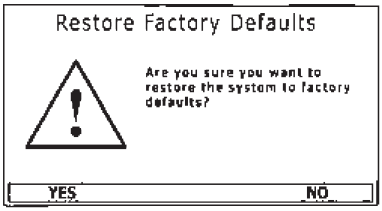

MAINTENANCE

GENERAL

Periodically the drain valve should be opened and the water allowed to run until it flows clean. This will help to prevent sediment buildup in the tank bottom.

⚠ DANGER

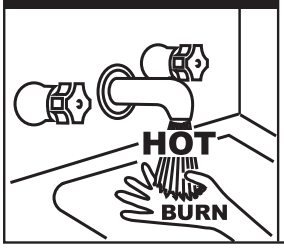

- Burn hazard.
- Hot water discharge.
- Keep clear of Temperature-Pressure Relief Valve discharge outlet.

Periodically check the temperature and pressure relief valve to ensure that it is in operating condition. Lift the lever at the top of the valve several times until the valve seats properly and operates freely.

Water heater maintenance includes periodic tank flushing and cleaning, and removal of lime scale from the heating element.

The heater tank is equipped with an anode rod to aid in corrosion control and should be inspected periodically (see Anode Rod Inspection).

ANODE ROD INSPECTION

Each water heater contains at least one anode rod, which will slowly deplete (due to electrolysis) prolonging the life of the water heater by protecting the glass-lined tank from corrosion. Adverse water quality, hotter water temperatures, high hot water usage, hydronic heating devices, and water softening methods can increase the rate of anode rod depletion. Once the anode rod is depleted, the tank will start to corrode, eventually developing a leak.

CAUTION

Property Damage Hazard

- Avoid water heater damage.
- Inspection and replacement of anode rod required.

Certain water conditions will cause a reaction between the anode rod and the water. The most common complaint associated with the anode rod is a “rotten egg smell” produced from the presence of hydrogen sulfide gas dissolved in the water. IMPORTANT: Do not remove this rod permanently as it will void any warranties. A special anode rod may be available if water odor or discoloration occurs. NOTE: This rod may reduce but not eliminate water odor problems. The water supply system may require special filtration equipment from a water conditioning company to successfully eliminate all water odor problems.

Artificially softened water is exceedingly corrosive because the process substitutes sodium ions for magnesium and calcium ions.

The use of a water softener may decrease the life of the water heater tank.

The anode rod should be inspected after a maximum of three years and annually thereafter until the condition of the anode rod dictates its replacement.

NOTE: Artificially softened water requires the anode rod to be inspected annually.

The following are typical (but not all) signs of a depleted anode rod:

- The majority of the rods diameter is less than 3/8”.
- Significant sections of the support wire (approx. 1/3 or more of the anode rod’s length) are visible.

If the anode rod show signs of either or both it should be replaced. NOTE: Whether re-installing or replacing the anode rod, check for any leaks and immediately correct if found.

In replacing the anode:

1. Turn off electric supply to the water heater.
2. Shut off the water supply and open a nearby hot water faucet to depressurize the water tank.
3. Drain approximately 5 gallons of water from tank. (Refer to “Draining and Flushing” for proper procedures). Close drain valve.
4. Remove old anode rod.
5. Use Teflon® tape or approved pipe sealant on threads and install new anode rod.
6. Turn on water supply and open a nearby hot water faucet to purge air from water system. Check for any leaks and immediately correct any if found.
7. Restart the water heater as directed in this manual. See the Repair Parts Illustration for anode rod location.

FLUSHING THE WATER HEATER

1. Turn off the electrical supply to the water heater at the breaker or disconnect switch.
2. Ensure the cold water inlet valve is open.
3. Open a nearby hot water faucet and let the water run until the water is no longer hot. Then close the hot water faucet.
4. Connect a hose to the water heater drain valve and terminate it to an adequate drain.
5. Ensure the drain hose is secured before and during the entire flushing procedure. Flushing is performed with system water pressure applied to the water heater.
6. Open the water heater drain valve to flush the storage tank.
7. Flush the water heater storage tank to remove sediment and allow the water to flow until it runs clean.
8. Close the water heater drain valve when flushing is completed.
9. Remove the drain hose.
10. Fill the water heater – see the Filling The Water Heater section in this manual.
11. Turn on the electrical supply to the water heater.
12. Place the water heater back in operation. Allow the water heater to complete several heating cycles to ensure it is operating properly.

SEDIMENT REMOVAL

Water borne impurities consist of fine particles of soil and sand which settle out and form a layer of sediment on the bottom of the tank. In time, if not removed, the level of sediment might reach the heating elements and cause their failure.

For convenience, sediment removal and element lime scale removal should be performed at the same time as follows.

LIME SCALE REMOVAL

Lime scale accumulations on the heating elements is a normal condition, common to all immersion type elements. Factors which affect the amounts of this formation are:

1. Amount of hot water used. As the volume of water heated increases, more scale results.
2. Water temperature. As the temperature of the water is increased, more scale is deposited on the elements.
3. Characteristics of water supply.

   Regardless of water treatment, the elements should be examined regularly.

Lime scale accumulations may cause noises to occur during operation.

It is recommended that a heating element be removed periodically for examination. If it is scaled, all of the elements should be removed and cleaned. If the tank bottom has an accumulation of sediment it should be cleaned.

Lime scale should be removed by dissolving the accumulation in UN•LIME® delimer. Do not use muriatic or hydrochloric acid base deliming solutions to remove lime scale from the elements.

THE PROCESS FOR LIME SCALE REMOVAL IS AS FOLLOWS:

1. Turn off electrical disconnect switch.
2. Drain the heater following DRAINING instructions.
3. Open front panel.
4. Disconnect the element wiring. Try not to disturb the wiring unnecessarily and reconnection will be easier.
5. Unscrew each element.
6. Remove the elements and gaskets from the openings.
   - Use a twisting, pulling action to remove elements scaled beyond the size of the tank openings.
   - Brush loose scale from elements.
7. Lime scale removal:
   - Place limed ends of heating elements into UN•LIME delimer and allow scale to dissolve. Do not permit delimer or water to contact heating element electrical terminals.
   - Silicates, sulfates, and aluminates must be removed by scraping or other mechanical means. Lime scale dissolvents will not remove these types of scale which are occasionally encountered.

Call the toll free phone number on the back cover of this Instruction Manual to purchase UN-LIME and heating element gaskets.

OTHER SCALE REMOVAL:

1. Flush cleaned ends of elements with water when deliming or cleaning is completed.
2. Remove sediment and scale from the tank bottom through the access provided by the element openings or drain valve opening.
   - The cold water inlet valve and drain valve may be opened to aid the cleanout process.
3. Clean remaining gasket material from tank and element flanges Do not reuse original element gaskets.
4. Put new gaskets on each element and install into tank openings.
5. Attach element wires to connection points from which they were removed.
6. Follow FILLING instructions to restore hot water service.
   - Check for water leaks around elements and proper operation when heater is filled.
   - Close the front panel.

TROUBLESHOOTING CHECKLIST

CHECKLIST

Before calling for service, check the following points to see if the cause of trouble can be identified and corrected.

Reviewing this checklist may eliminate the need of a service call and quickly restore hot water service. See ***Figure 3*** and ***Figure 4*** in this manual to identify and locate water heater components.

⚠ WARNING

- **Before removing any access panels or servicing the water heater, make sure the electrical supply to the water heater is turned "OFF."**
- **Failure to do this could result in death, serious bodily injury, or property damage.**

NOT ENOUGH OR NO HOT WATER

1. Be certain the electrical disconnect switch serving the water heater is in the ON position.
2. Check the fuses.
   - The electrical disconnect switch usually contains fuses.
   - The heater has fusing.
3. If the water was excessively hot, and is now cold, the high limit switch may have activated.
   - See the Temperature Regulation section of this manual for more information on how to reset the ECO high limit controls.
4. The capacity of the heater may have been exceeded by a large demand for hot water.
   - Large demands require a recovery period to restore water temperature.
5. Cooler incoming water temperature will lengthen the time required to heat water to the desired temperature.
6. Look for hot water leakage.
7. Sediment or pipe scale may be affecting water heater operation.

ABNORMAL SOUNDS

1. Sediment or lime scale accumulations on the elements causes sizzling and hissing noises when the heater is operating.
   - The sounds are normal, however, the tank bottom and elements should be cleaned. See the Maintenance section of this manual.
2. Some of the electrical components of the water heater make sounds which are normal.
   - Contactors will "click" or snap as the heater starts and stops.
   - Transformers and contacts often hum.

WATER LEAKAGE IS SUSPECTED

Refer to Leakage Checkpoint on the following page.

1. Check to see if the heater drain valve is tightly closed.
2. If the outlet of the relief valve is leaking it may represent:
   - Excessive water temperature.
   - Faulty relief valve.
   - Excessive water pressure.
3. Excessive water pressure is the most common cause of relief valve leakage. It is often caused by a "closed system". See "Closed Water Systems" and "Thermal Expansion" in the Installation section of this manual for more information.
4. Examine the area around the element for gasket leakage.
   - Tighten the elements or, if necessary, follow the WATER AND LIME SCALE REMOVAL procedure to replace the gaskets.

IF YOU CANNOT IDENTIFY OR CORRECT THE SOURCE OF MALFUNCTION

1. Turn the power supply to the water heater off.
2. Close the supply water inlet valve to the heater.
3. Contact a Qualified Service Agency in your area.

REPLACEMENT PARTS

Call the toll free phone number listed on the warranty sheet of this Instruction Manual for assistance in locating replacement parts. When ordering parts, specify complete model no., serial no., (see rating plate), quantity and name of part desired. Standard hardware items should be purchased locally.

LEAKAGE CHECKPOINTS

INSTRUCTIONS: USE THIS ILLUSTRATION AS A GUIDE WHEN CHECKING FOR SOURCES OF WATER LEAKAGE.

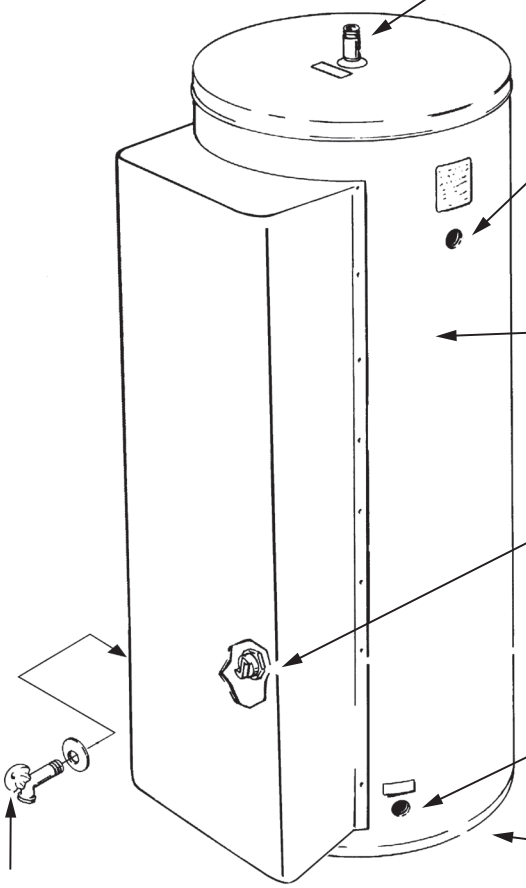

Where possible, remove or lift top cover to examine threads of fittings installed into tank for evidence of leakage. Correct fitting leaks as necessary.

Relief valve operation and leakage may be due to water expansion during heating cycle or foreign material on seat of valve. If the valve is not piped to an open drain, the released water could be mistaken for a leaking heater.
To check where threaded portion enters tank, insert Q-Tip® or similar absorbent material between jacket opening and valve to swab spud area. Remove valve* if leak is indicated and repair with pipe joint compound.

Water on the side of the tank may be condensation due to the panel or insulation not being in place.

Water leaks at the elements may be due to:

1. Defective elements which leak at terminals or through flange. Replace element*.
2. Loose element/gasket leak:
   Tighten element with element wrench. If leak continues, remove element* and discard gasket. Clean gasket seating areas and reinstall element with new gasket.

Condensation and dripping may appear on pipes when inlet water temperature is low. Pipe fitting may be leaking.

All water which appears at the heater bottom or on the surrounding floor may be caused by condensation, loose connections or relief valve operation and leakage. Do not replace the heater until a full inspection of all potential leak points is made and corrective steps taken to stop the leak.
Leakage from other appliances, water lines, or ground seepage
should also be suspected until proved otherwise.

Drain valve leakage could be from the valve itself. Either correct the problem or replace the valve*. To check for leakage where threaded portion enters tank, insert Q-tip or similar absorbent material between jacket opening and valve to swab spud area. Remove valve* if leak is indicated and repair with pipe joint compound.

Contact a Qualified Service Agency as it is necessary to shut off electricity and drain tank to perform procedure.

COMMERCIAL ELECTRIC - (1 UNIT)

WARNING: THIS DRAWING SHOWS SUGGESTED PIPING CONFIGURATION AND OTHER DEVICES; CHECK WITH LOCAL CODES AND ORDINANCES FOR ADDITIONAL REQUIREMENTS.

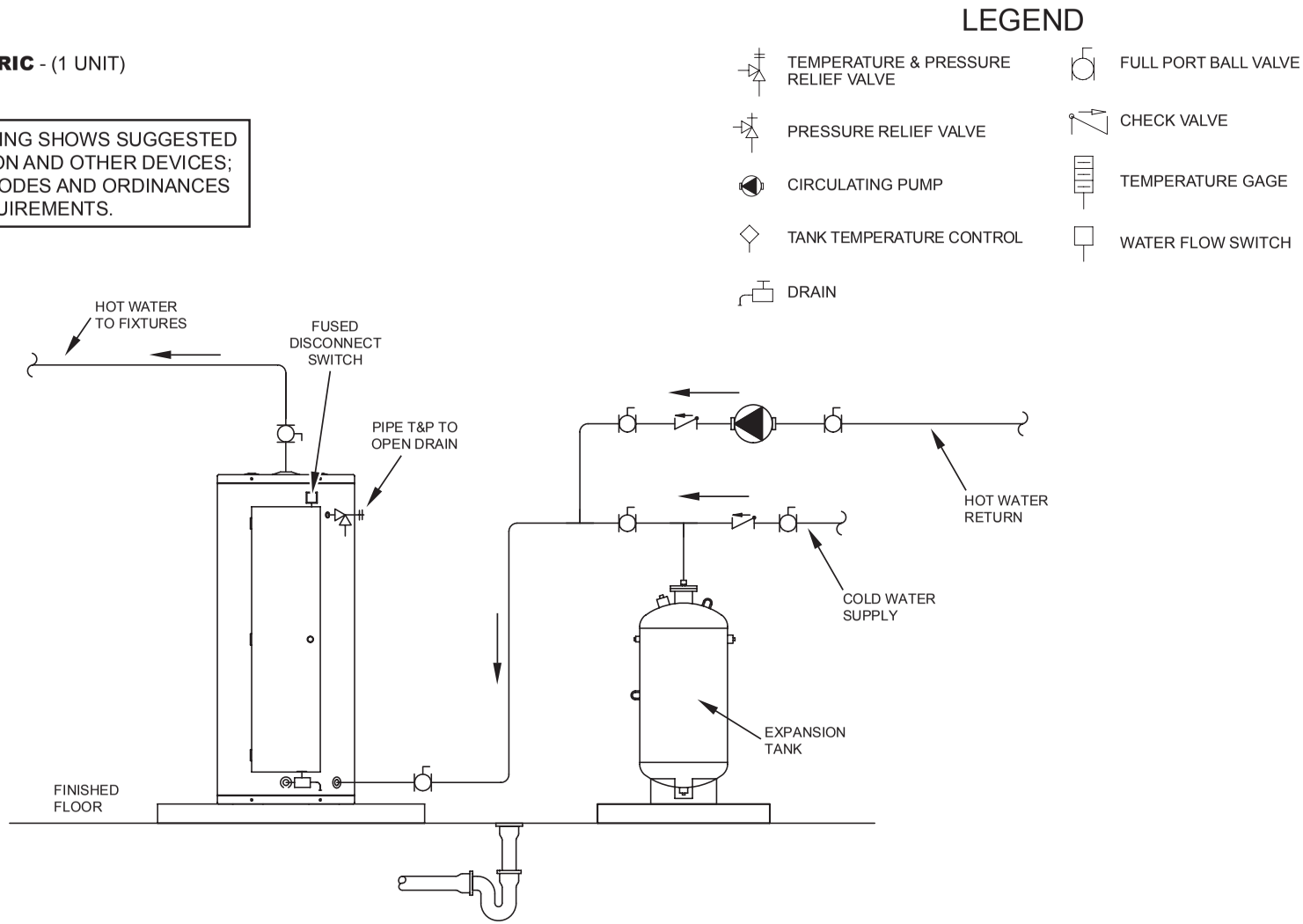

NOTES:
1. Preferred piping diagram.
2. The temperature and pressure relief valve setting shall not exceed pressure rating of any component in the system.
3. Service valves are shown for servicing unit. However, local codes shall govern their usage.

COMMERCIAL ELECTRIC - (1 UNIT) WITH VERTICAL STORAGE TANK

WARNING: THIS DRAWING SHOWS SUGGESTED PIPING CONFIGURATION AND OTHER DEVICES; CHECK WITH LOCAL CODES AND ORDINANCES FOR ADDITIONAL REQUIREMENTS.

LEGEND

- TEMPERATURE & PRESSURE RELIEF VALVE
- PRESSURE RELIEF VALVE
- CIRCULATING PUMP
- TANK TEMPERATURE CONTROL
- DRAIN
- FULL PORT BALL VALVE
- CHECK VALVE
- TEMPERATURE GAGE
- WATER FLOW SWITCH

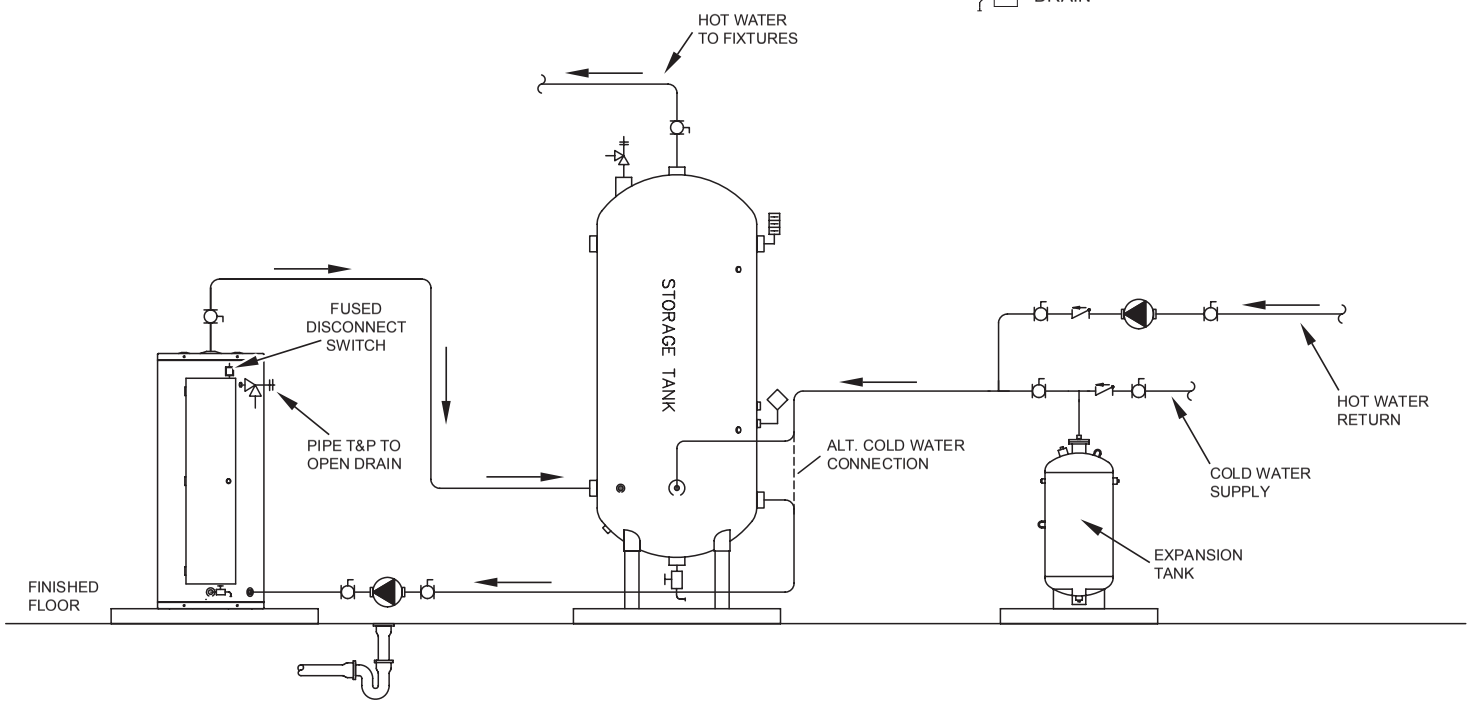

NOTES:

1. Preferred piping diagram.
2. The temperature and pressure relief valve setting shall not exceed pressure rating of any component in the system.
3. Service valves are shown for servicing unit. However, local codes shall govern their usage.
4. The Tank Temperature Control should be wired to and control the pump between the water heater(s) and the storage tank(s).
5. The water heater's operating thermostat should be set 5 degrees F higher than the Tank Temperature Control.

COMMERCIAL ELECTRIC - (1 UNIT) WITH HORIZONTAL STORAGE TANK

WARNING: THIS DRAWING SHOWS SUGGESTED PIPING CONFIGURATION AND OTHER DEVICES; CHECK WITH LOCAL CODES AND ORDINANCES FOR ADDITIONAL REQUIREMENTS.

LEGEND

- TEMPERATURE & PRESSURE RELIEF VALVE
- PRESSURE RELIEF VALVE
- CIRCULATING PUMP
- TANK TEMPERATURE CONTROL
- DRAIN
- FULL PORT BALL VALVE
- CHECK VALVE
- TEMPERATURE GAGE
- WATER FLOW SWITCH

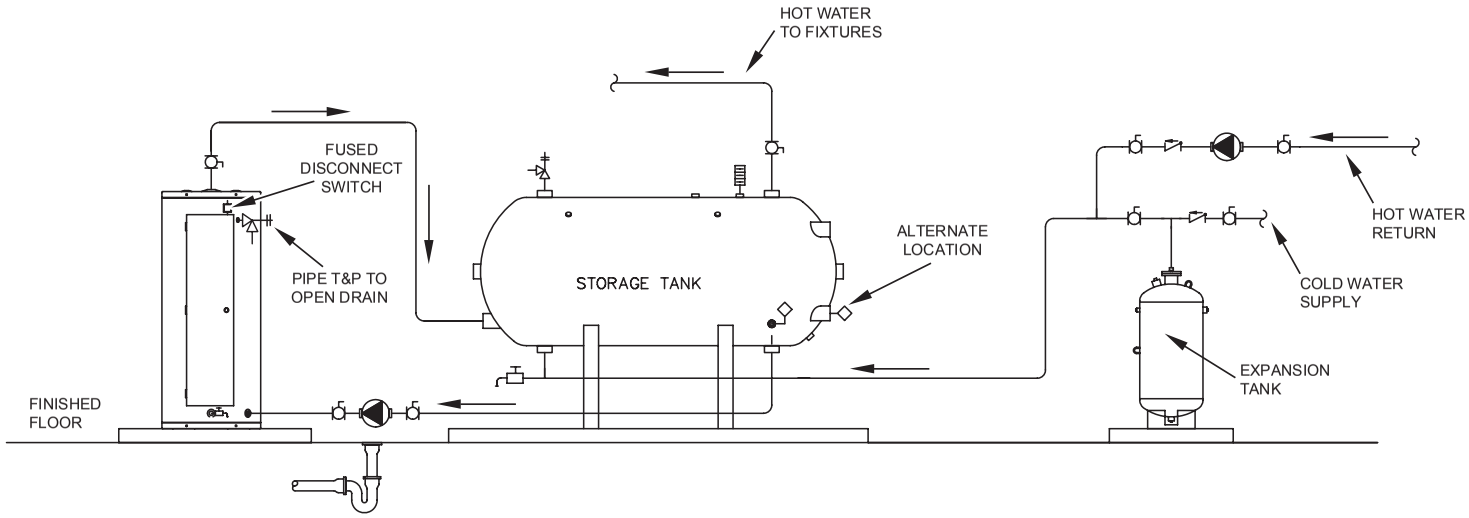

NOTES:

1. Preferred piping diagram.
2. The temperature and pressure relief valve setting shall not exceed pressure rating of any component in the system.
3. Service valves are shown for servicing unit. However, local codes shall govern their usage.
4. The Tank Temperature Control should be wired to and control the pump between the water heater(s) and the storage tank(s).
5. The water heater's operating thermostat should be set 5 degrees F higher than the Tank Temperature Control.

COMMERCIAL ELECTRIC - (2 UNITS)

WARNING: THIS DRAWING SHOWS SUGGESTED PIPING CONFIGURATION AND OTHER DEVICES; CHECK WITH LOCAL CODES AND ORDINANCES FOR ADDITIONAL REQUIREMENTS.

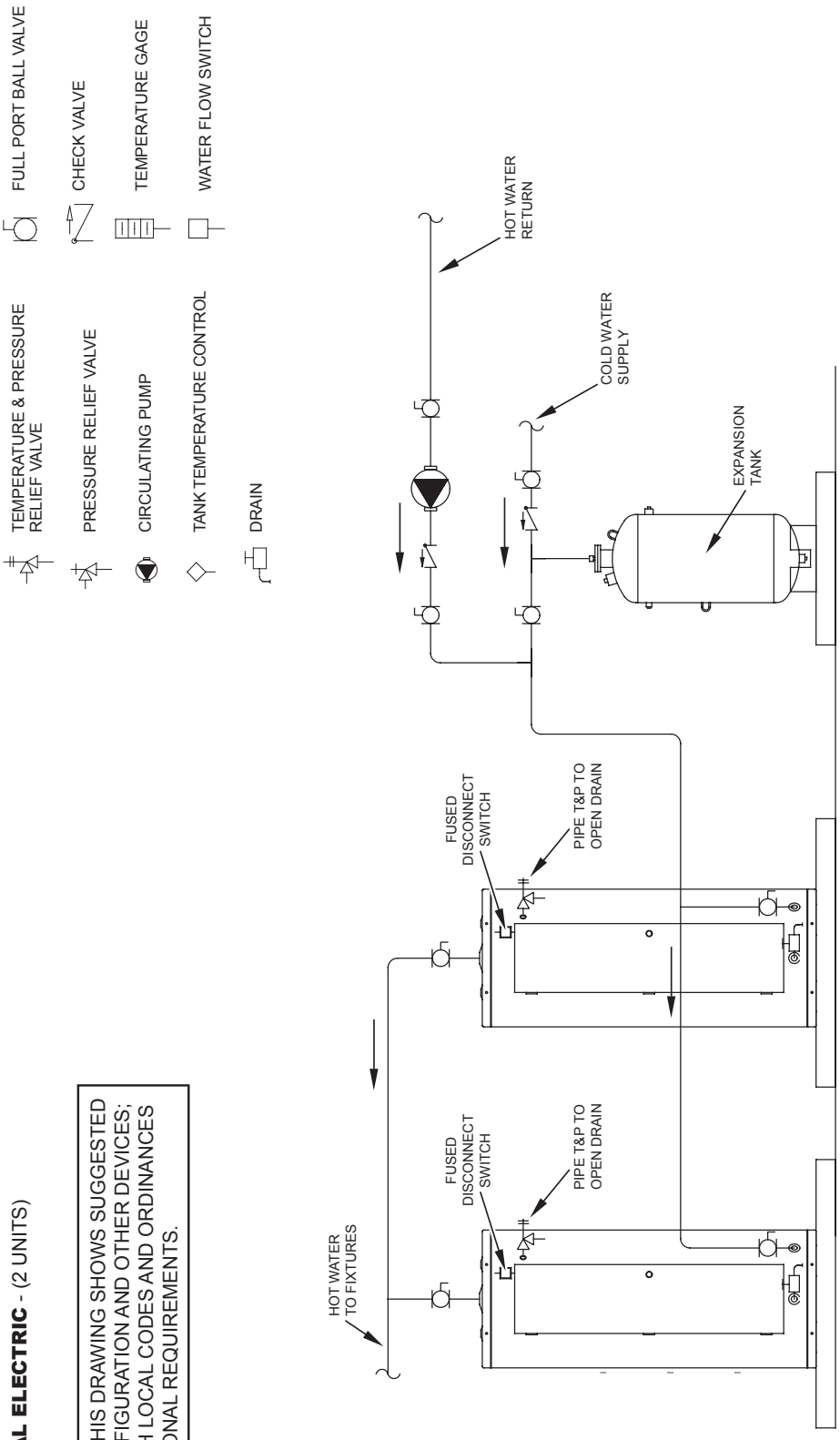

NOTES:

1. Preferred piping diagram.
2. The temperature and pressure relief valve setting shall not exceed pressure rating of any component in the system.
3. Service valves are shown for servicing unit. However, local codes shall govern their usage.

COMMERCIAL ELECTRIC - (2 UNITS) WITH VERTICAL STORAGE TANK

WARNING: THIS DRAWING SHOWS SUGGESTED PIPING CONFIGURATION AND OTHER DEVICES; CHECK WITH LOCAL CODES AND ORDINANCES FOR ADDITIONAL REQUIREMENTS.

LEGEND

- TEMPERATURE & PRESSURE RELIEF VALVE
- PRESSURE RELIEF VALVE
- CIRCULATING PUMP
- TANK TEMPERATURE CONTROL
- DRAIN
- FULL PORT BALL VALVE
- CHECK VALVE
- TEMPERATURE GAGE
- WATER FLOW SWITCH

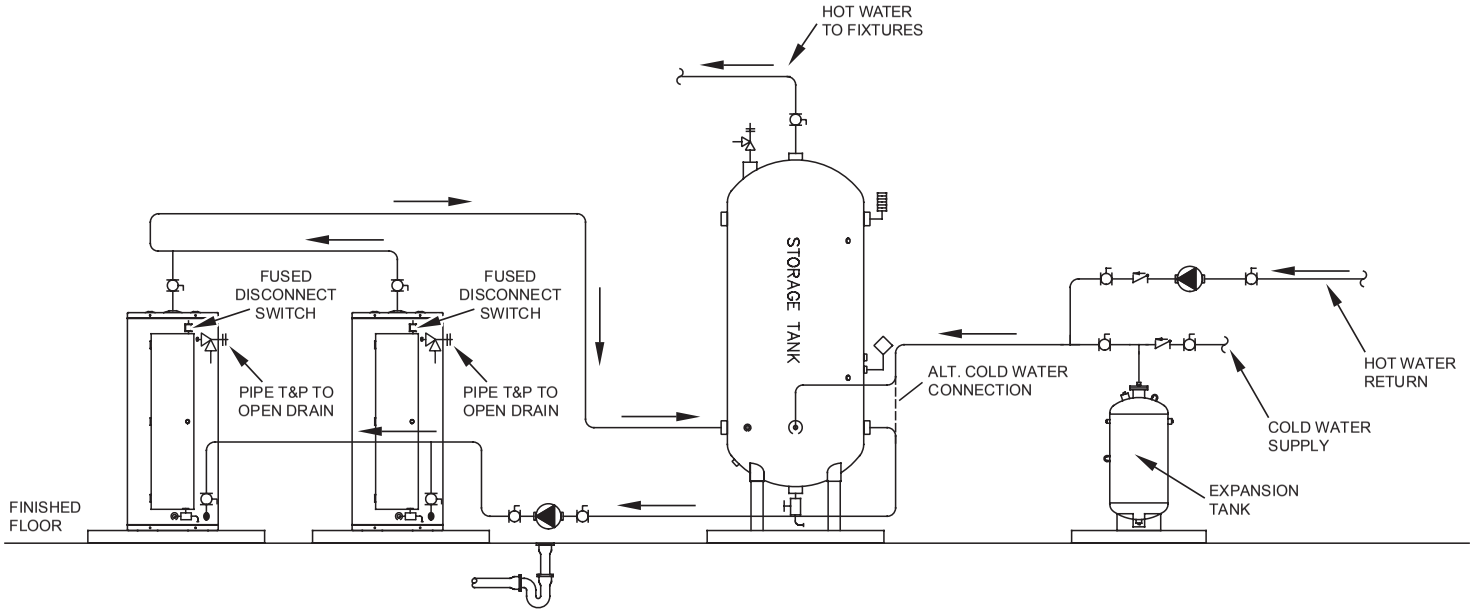

NOTES:

1. Preferred piping diagram.
2. The temperature and pressure relief valve setting shall not exceed pressure rating of any component in the system.
3. Service valves are shown for servicing unit. However, local codes shall govern their usage.
4. The Tank Temperature Control should be wired to and control the pump between the water heater(s) and the storage tank(s).
5. The water heater's operating thermostat should be set 5 degrees F higher than the Tank Temperature Control.

COMMERCIAL ELECTRIC - (2 UNITS) WITH HORIZONTAL STORAGE TANK

WARNING: THIS DRAWING SHOWS SUGGESTED PIPING CONFIGURATION AND OTHER DEVICES; CHECK WITH LOCAL CODES AND ORDINANCES FOR ADDITIONAL REQUIREMENTS.

LEGEND

- TEMPERATURE & PRESSURE RELIEF VALVE
- PRESSURE RELIEF VALVE
- CIRCULATING PUMP
- TANK TEMPERATURE CONTROL
- DRAIN
- FULL PORT BALL VALVE
- CHECK VALVE
- TEMPERATURE GAGE
- WATER FLOW SWITCH

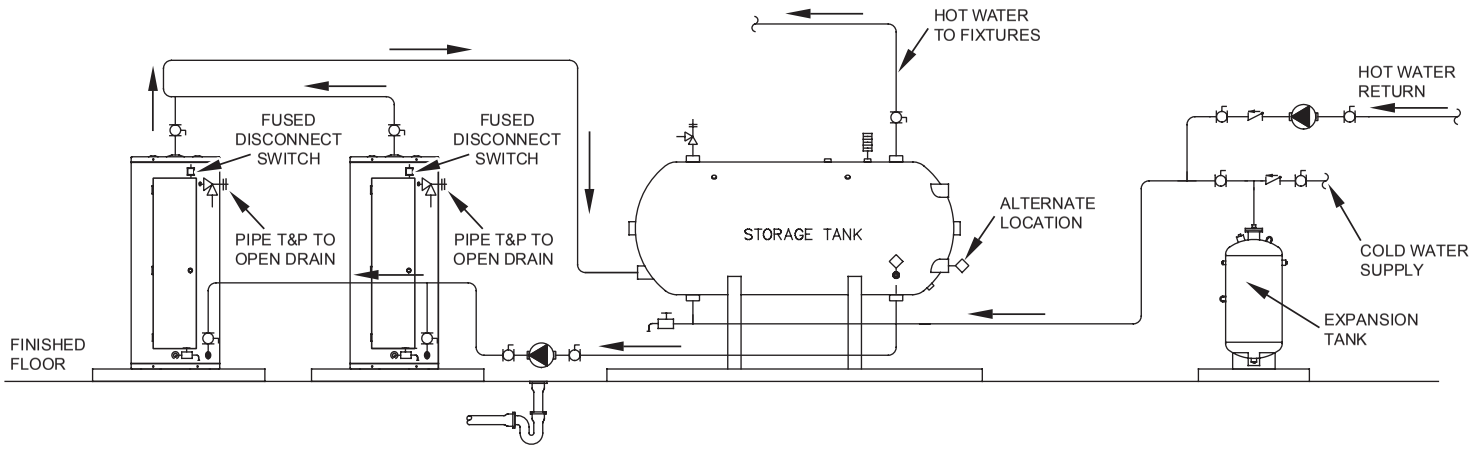

NOTES:

1. Preferred piping diagram.
2. The temperature and pressure relief valve setting shall not exceed pressure rating of any component in the system.
3. Service valves are shown for servicing unit. However, local codes shall govern their usage.
4. The Tank Temperature Control should be wired to and control the pump between the water heater(s) and the storage tank(s).
5. The water heater's operating thermostat should be set 5 degrees F higher than the Tank Temperature Control.

COMMERCIAL ELECTRIC - (3 UNITS)

WARNING: THIS DRAWING SHOWS SUGGESTED PIPING CONFIGURATION AND OTHER DEVICES; CHECK WITH LOCAL CODES AND ORDINANCES FOR ADDITIONAL REQUIREMENTS.

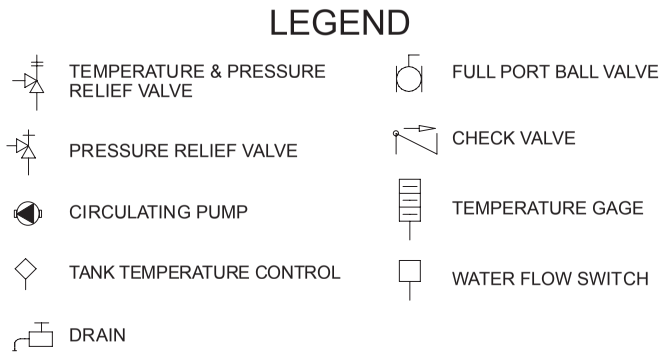

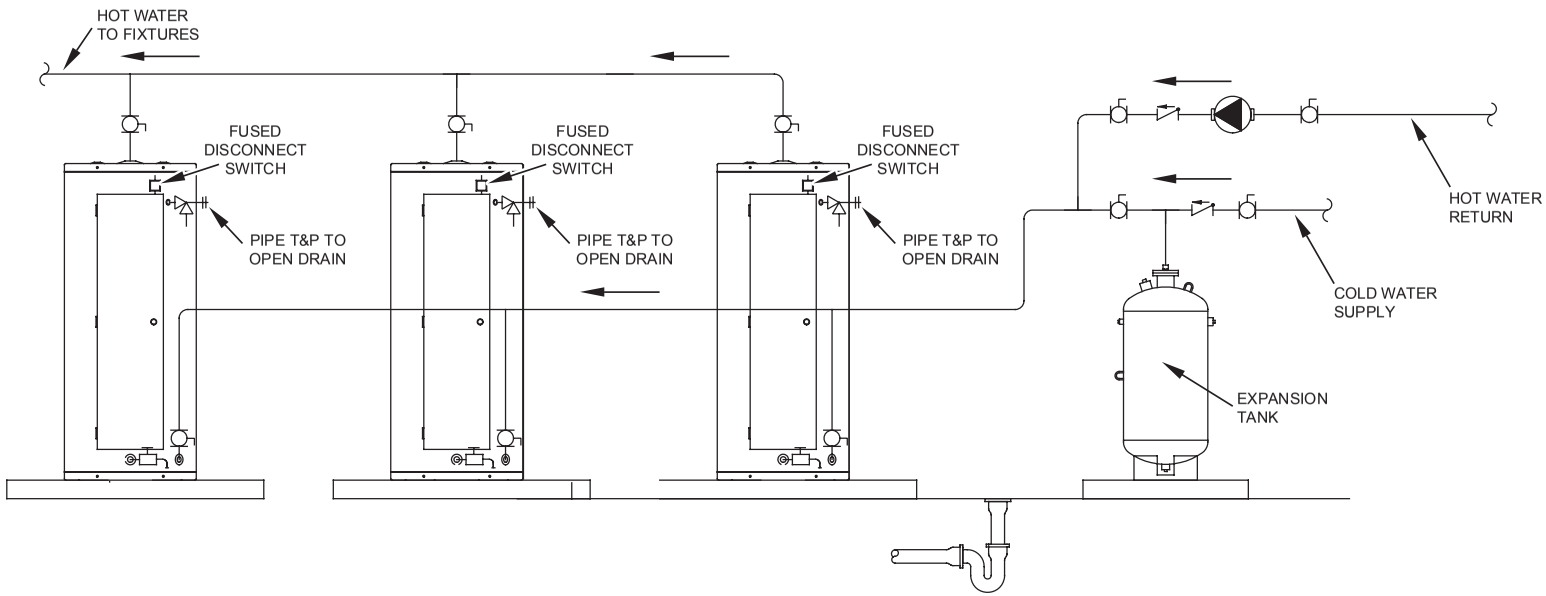

NOTES:
1. Preferred piping diagram.
2. The temperature and pressure relief valve setting shall not exceed pressure rating of any component in the system.
3. Service valves are shown for servicing unit. However, local codes shall govern their usage.

COMMERCIAL ELECTRIC - (3 UNITS) WITH VERTICAL STORAGE TANK

WARNING: THIS DRAWING SHOWS SUGGESTED PIPING CONFIGURATION AND OTHER DEVICES; CHECK WITH LOCAL CODES AND ORDINANCES FOR ADDITIONAL REQUIREMENTS.

LEGEND

- TEMPERATURE & PRESSURE RELIEF VALVE
- PRESSURE RELIEF VALVE
- CIRCULATING PUMP
- TANK TEMPERATURE CONTROL
- DRAIN
- FULL PORT BALL VALVE
- CHECK VALVE
- TEMPERATURE GAGE
- WATER FLOW SWITCH

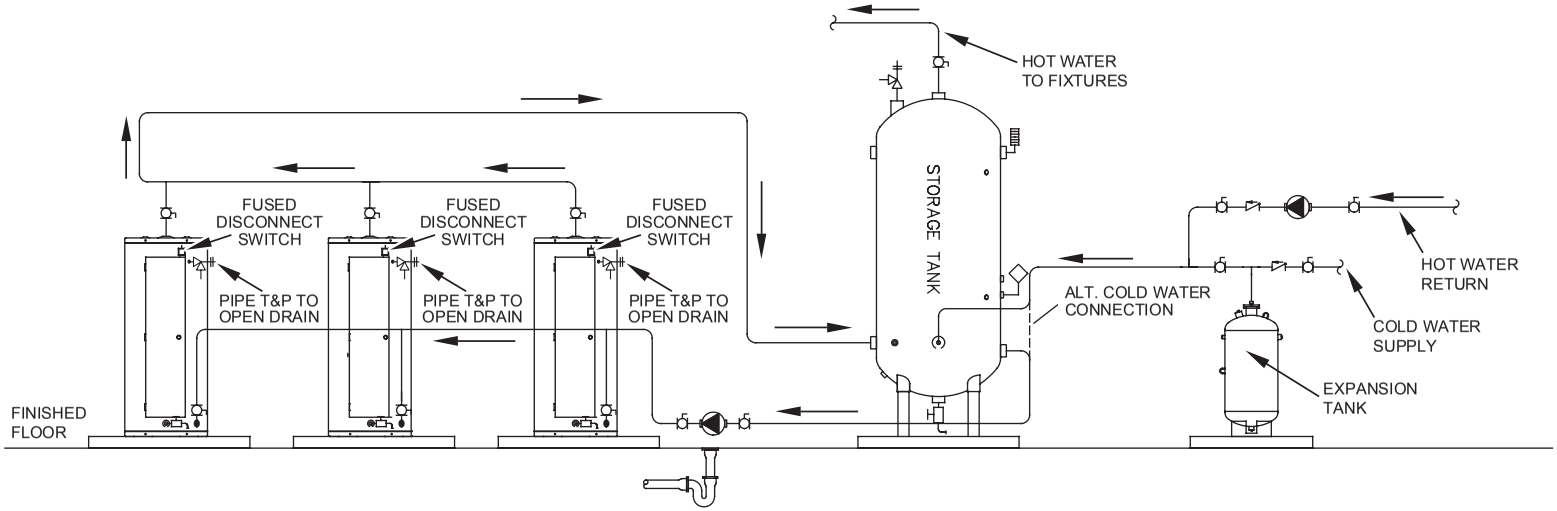

NOTES:

1. Preferred piping diagram.
2. The temperature and pressure relief valve setting shall not exceed pressure rating of any component in the system.
3. Service valves are shown for servicing unit. However, local codes shall govern their usage.
4. The Tank Temperature Control should be wired to and control the pump between the water heater(s) and the storage tank(s).
5. The water heater's operating thermostat should be set 5 degrees F higher than the Tank Temperature Control.

COMMERCIAL ELECTRIC - (3 UNITS) WITH HORIZONTAL STORAGE TANK

WARNING: THIS DRAWING SHOWS SUGGESTED PIPING CONFIGURATION AND OTHER DEVICES; CHECK WITH LOCAL CODES AND ORDINANCES FOR ADDITIONAL REQUIREMENTS.

LEGEND

- TEMPERATURE & PRESSURE RELIEF VALVE
- PRESSURE RELIEF VALVE
- CIRCULATING PUMP
- TANK TEMPERATURE CONTROL
- DRAIN
- FULL PORT BALL VALVE
- CHECK VALVE
- TEMPERATURE GAGE
- WATER FLOW SWITCH

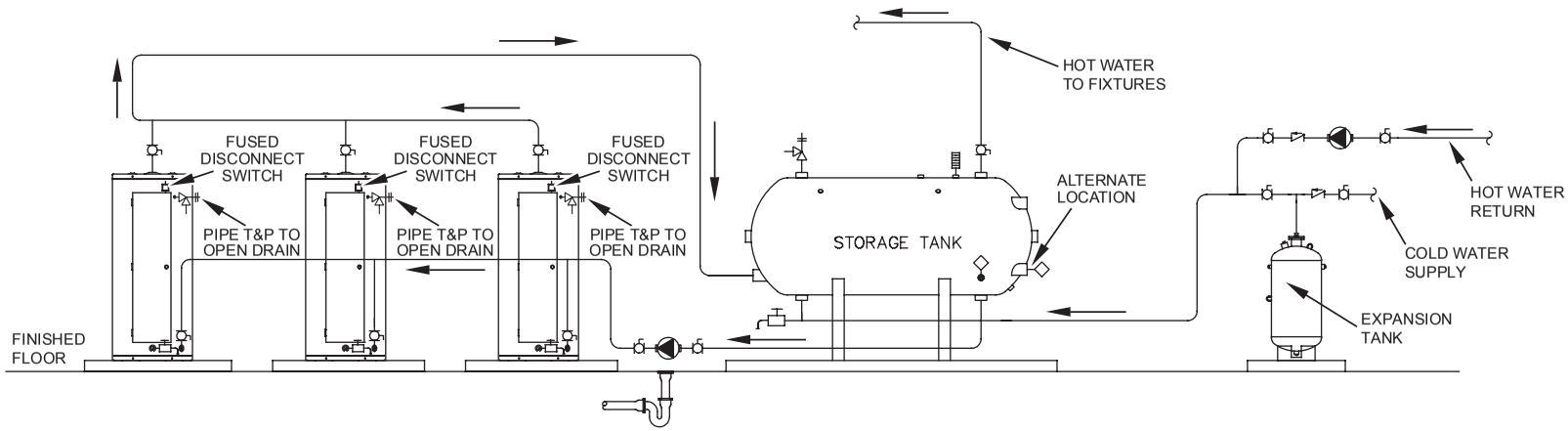

NOTES:

1. Preferred piping diagram.
2. The temperature and pressure relief valve setting shall not exceed pressure rating of any component in the system.
3. Service valves are shown for servicing unit. However, local codes shall govern their usage.
4. The Tank Temperature Control should be wired to and control the pump between the water heater(s) and the storage tank(s).
5. The water heater's operating thermostat should be set 5 degrees F higher than the Tank Temperature Control.

COMMERCIAL ELECTRIC - (4 UNITS)

WARNING: THIS DRAWING SHOWS SUGGESTED PIPING CONFIGURATION AND OTHER DEVICES; CHECK WITH LOCAL CODES AND ORDINANCES FOR ADDITIONAL REQUIREMENTS.

LEGEND

- TEMPERATURE & PRESSURE RELIEF VALVE
- PRESSURE RELIEF VALVE
- CIRCULATING PUMP
- TANK TEMPERATURE CONTROL
- DRAIN
- FULL PORT BALL VALVE
- CHECK VALVE
- TEMPERATURE GAGE
- WATER FLOW SWITCH

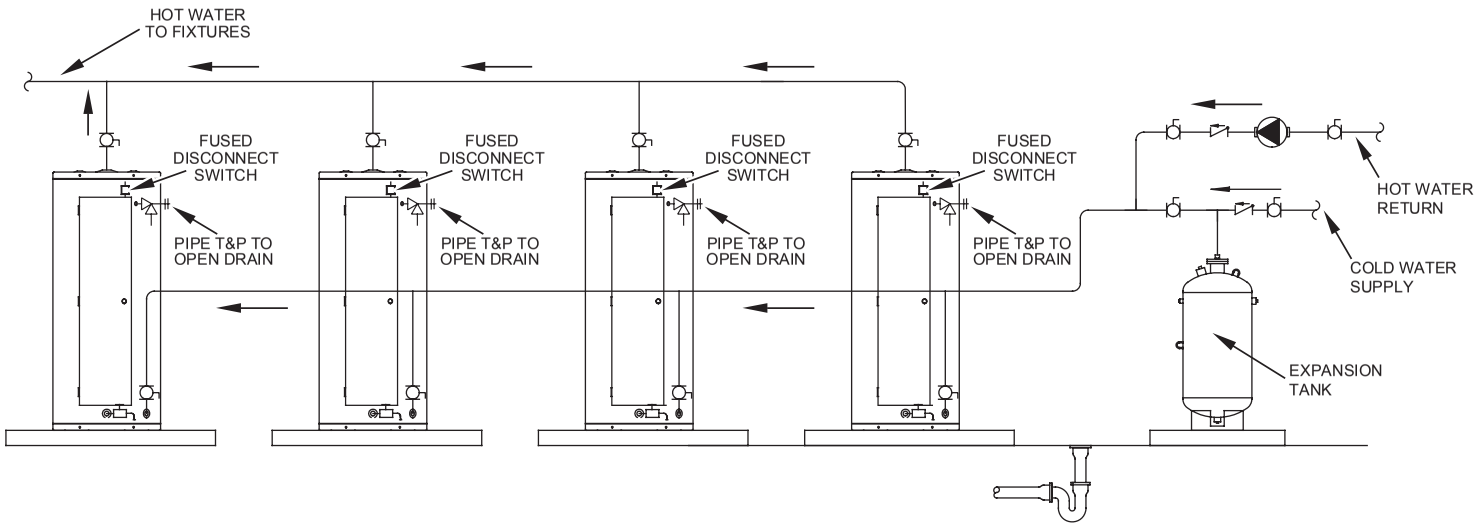

NOTES:
1. Preferred piping diagram.
2. The temperature and pressure relief valve setting shall not exceed pressure rating of any component in the system.
3. Service valves are shown for servicing unit. However, local codes shall govern their usage.

COMMERCIAL ELECTRIC - (4 UNITS) WITH VERTICAL STORAGE TANK

WARNING: THIS DRAWING SHOWS SUGGESTED PIPING CONFIGURATION AND OTHER DEVICES; CHECK WITH LOCAL CODES AND ORDINANCES FOR ADDITIONAL REQUIREMENTS.

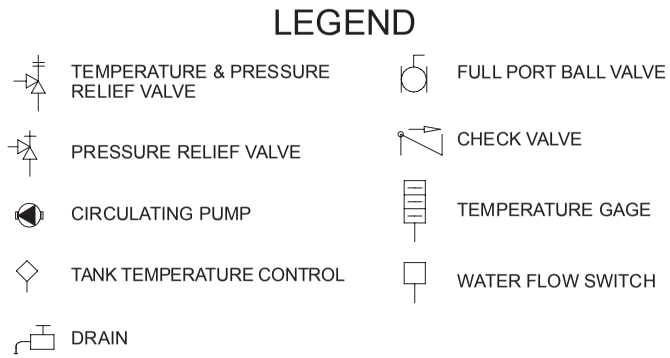

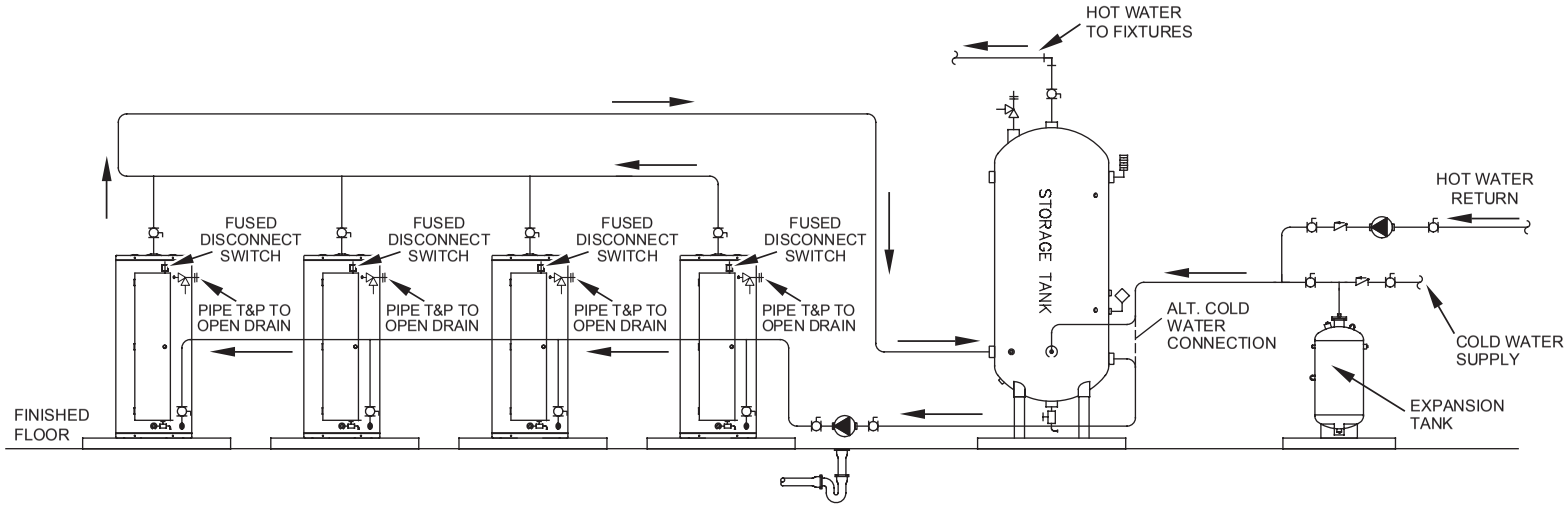

NOTES:

1. Preferred piping diagram.
2. The temperature and pressure relief valve setting shall not exceed pressure rating of any component in the system.
3. Service valves are shown for servicing unit. However, local codes shall govern their usage.
4. The Tank Temperature Control should be wired to and control the pump between the water heater(s) and the storage tank(s).
5. The water heater's operating thermostat should be set 5 degrees F higher than the Tank Temperature Control.

COMMERCIAL ELECTRIC - (4 UNITS) WITH HORIZONTAL STORAGE TANK

WARNING: THIS DRAWING SHOWS SUGGESTED PIPING CONFIGURATION AND OTHER DEVICES; CHECK WITH LOCAL CODES AND ORDINANCES FOR ADDITIONAL REQUIREMENTS.

LEGEND

- TEMPERATURE & PRESSURE RELIEF VALVE
- PRESSURE RELIEF VALVE
- CIRCULATING PUMP
- TANK TEMPERATURE CONTROL
- DRAIN
- FULL PORT BALL VALVE
- CHECK VALVE
- TEMPERATURE GAGE
- WATER FLOW SWITCH

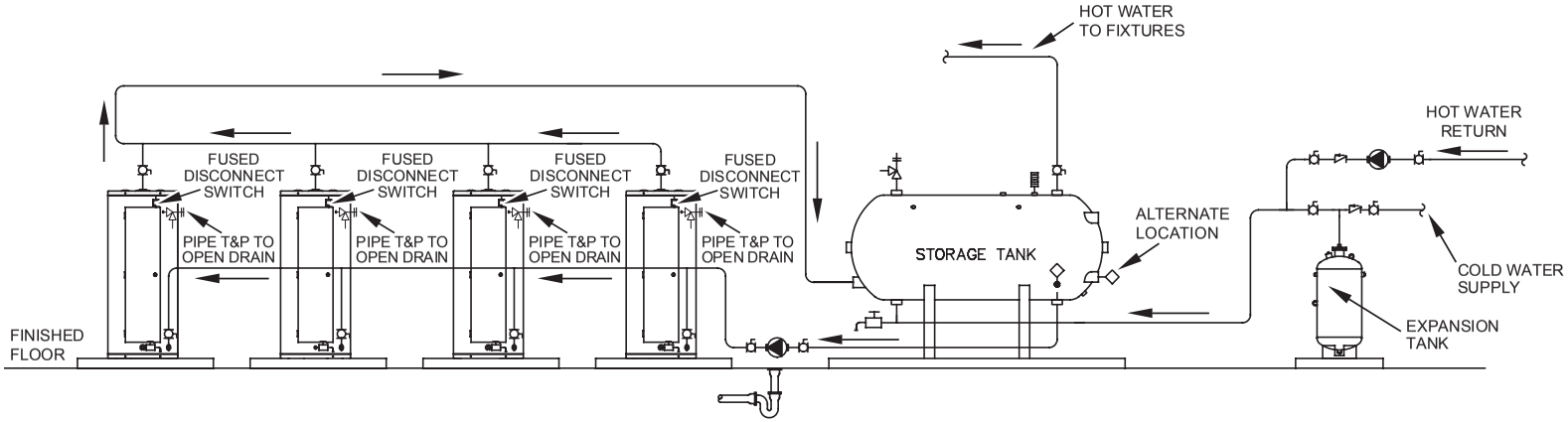

NOTES:

1. Preferred piping diagram.
2. The temperature and pressure relief valve setting shall not exceed pressure rating of any component in the system.
3. Service valves are shown for servicing unit. However, local codes shall govern their usage.
4. The Tank Temperature Control should be wired to and control the pump between the water heater(s) and the storage tank(s).
5. The water heater's operating thermostat should be set 5 degrees F higher than the Tank Temperature Control.

MANIFOLD KITS

MANIFOLD KITS

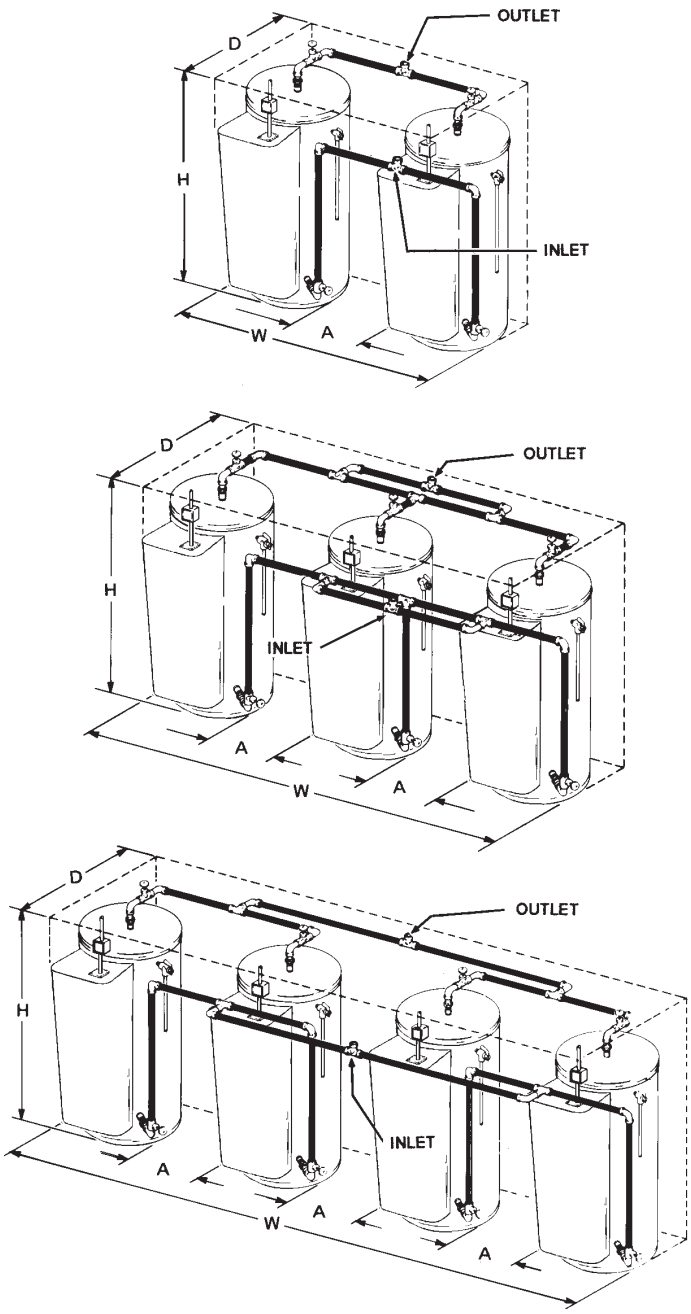

ALL DIMENSIONS IN INCHES

Table 14. Manifold Kits with Two Heaters					
Tank Capacity (Gallons)	Part Number	H	W	D	A
52	100109231	66 1/4	56 3/4	27 1/4	13 1/4
80	100109231	70 1/2	60 1/4	31 1/4	9 3/4
120	100109231	73 1/4	64 1/2	35 3/4	5 1/2
Inlet and outlet size - 1 1/2					

Table 15. Manifold Kits with Three Heaters					
Tank Capacity (Gallons)	Part Number	H	W	D	A
52	100109232	66 1/4	91 3/4	27 1/4	13 1/4
80	100109232	70 1/2	95 1/4	31 1/4	9 3/4
120	100109232	73 1/4	99 1/2	35 3/4	5 1/2
Inlet and outlet size - 2 1/2					

Table 16. Manifold Kits with Four Heaters					
Tank Capacity (Gallons)	Part Number	H	W	D	A
52	100109233	66 1/4	126 3/4	27 1/4	13 1/4
80	100109233	70 1/2	130 1/4	31 1/4	9 3/4
120	100109233	73 1/4	134 1/2	35 3/4	5 1/2
Inlet and outlet size - 2 1/2					

NOTES

NOTES

www.hotwater.com

Copyright © 2017 A. O. Smith Corporation, All rights reserved.